11eme once
TURBIL GROUP

TECHNICAL GUARDRAIL M-SAFE



INDEX

INTRODUCTION 4
ADVANTAGES 5
STANDARDS REMINDER 6
REQUIRED TOOLS 9
POST SELECTION GUIDE 10
NEW FEATURES 11
GENERAL PRINCIPLES 12
TYPES OF CONFIGURATION 15
FLAT-MOUNT GUARDRAIL M-SAFE REF. MT 17
FACE-MOUNT GUARDRAIL M-SAFE REF. MW 20
OFFSET FACE-MOUNT GUARDRAIL M-SAFE REF. MWO 23
EXTERIOR FACE-MOUNT GUARDRAIL M-SAFE REF. MWOE 29
EXTERIOR FACE-MOUNT ON CLADDING GUARDRAIL M-SAFE REF. MWOEM 35
Z BASE UNDER COPING MOUNT GUARDRAIL M-SAFE REF. MZ 38
STEEL DECK MOUNT GUARDRAIL M-SAFE REF. MM 47
GUARDRAIL FOR WATERPROOFED SLAB (D BASE) M-SAFE REF. MD 50
GUARDRAIL FOR WATERPROOFED STEEL DECK (BE BASE) M-SAFE REF. MMW 54
FREESTANDING GUARDRAIL M-SAFE REF. MF 58
COMPONENT REFERENCES 61

TECHNICAL AND INSTALLATION SHEET

NF E85-015: 2019, EN 14122-3: 2016

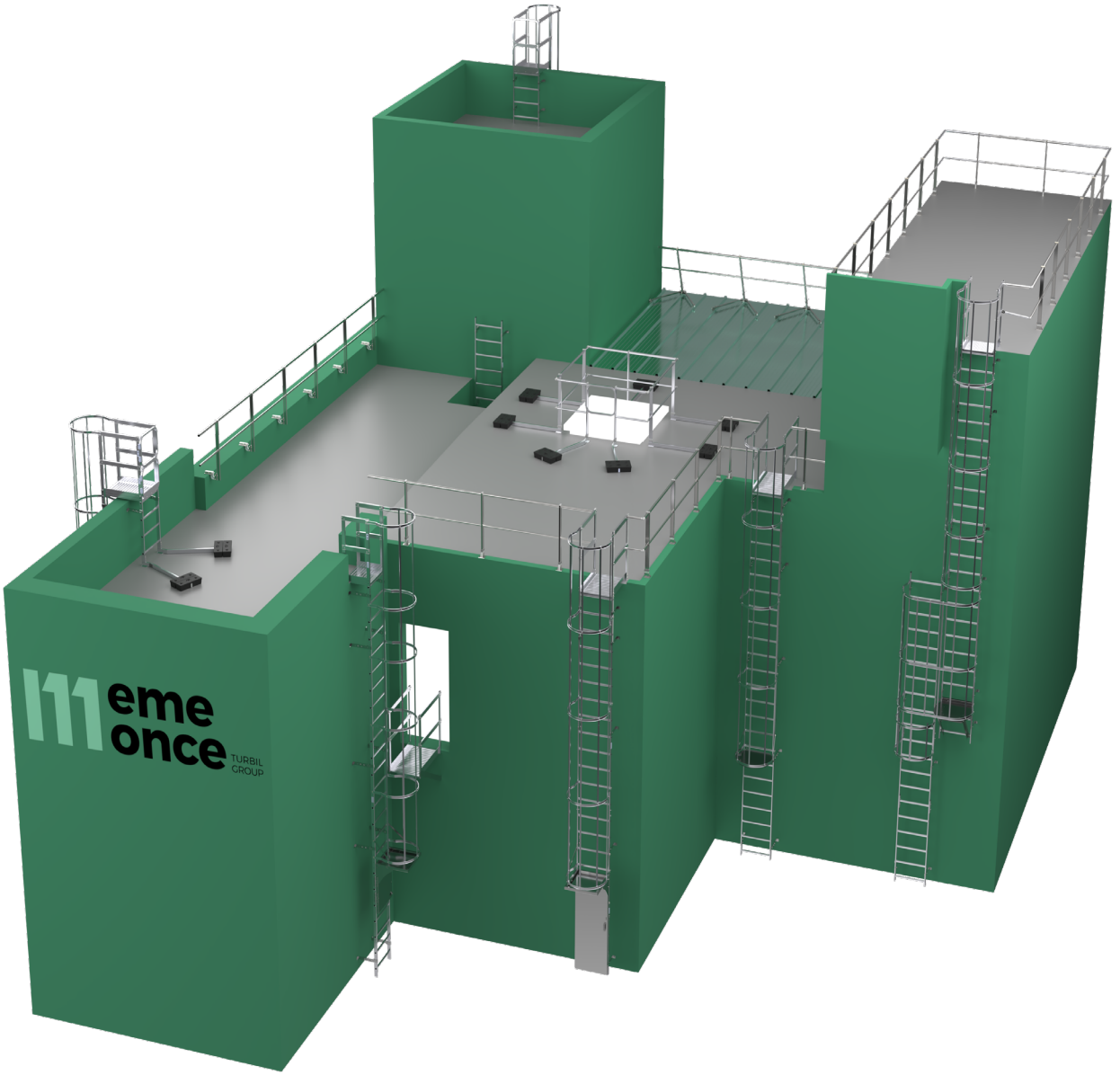

INTRODUCTION
TECHNICAL GUARDRAIL

The M-SAFE has successfully passed static and dynamic tests in accordance with the standards: NF E85-015: 2019, EN 14122-3: 2016. EN13374+A1: 2018 et NTC2018.

The M-SAFE aluminium guardrail is a collective protection system designed to prevent falls.
Its design allows for quick and easy installation thanks to its interlocking system of rails and mid-rails with reduced-diameter ends.

There are different solutions for fixing our aluminium guardrails:

Freestanding system: A ballast system using counterweights, offering a solution to secure flat roofs when mechanical fixing is technically impossible, or when it is necessary to avoid perforating the waterproofing layer.
In this system, elastomer pads under the concrete weights are coated with a layer of polypropylene and UV protection treatment, providing waterproofing protection. These pads rest directly on the roof surface.

BE base under coping mount: A mounting system on the top of the parapet, with or without insulation, for thicknesses ranging from 0 to 160 mm.

Offset face-mount: A lateral mounting system fixed inside the parapet, with an offset.

Flat mount: A mounting system fixed directly on metal structures, parapets, or concrete slabs.

Face-mount (no offset): A lateral mounting system inside the parapet without offset.

Steel deck mount: A mounting system for dry steel decks or sandwich panels (using specific bases) with specialized fixings for the steel deck—DBS screws, which, combined with chimney washers, ensure watertightness of the installation.

Exterior face-mount: A mounting system on the exterior side of the terrace, used when interior parapet mounting is technically impossible, with or without offset.

Exterior face-mount on steel deck: A mounting system on cladding at the exterior of the terrace, when interior parapet fixing is not feasible.

BE base mount: A system for mounting on waterproofed slabs, available at three standard heights (300, 400 and 500 mm), compliant with DTU 43.1 requirements.

BE base mount: A system for mounting on waterproofed steel decks, available at three standard heights (300. 400. and 500 mm), compliant with DTU 43.3 requirements.

ADVANTAGES

AESTHETICHS AND DURABILITY

Seen from the outside of the building, the guardrails are barely visible.
The raw aluminiumalloy, or powder-coated paint (available on request), ensures an aesthetically pleasing system with excellent long-term corrosion resistance.

SPECIAL REQUIREMENTS: ONE SOLUTION

Specific accessories (gates, wall fixings, corners, baseboards) allow us to meet the unique needs of each client—always in compliance with current standards.

FAST AND EASY INSTALATION

The system consists of only a small number of components. Due in part to their optimized weight, the elements in the M-SAFE product range are easy to assemble and disassemble, making them easy to transport. With the necessary tools and product knowledge, installation takes truly extraordinarily time.

LOAD-BEARING SURFACE INDEPENDENT OF THE SUPPORT

The freestanding M-SAFE guardrail can be installed on surfaces such as waterproofing membranes, drainage slabs, gravel, vegetative substrates, etc. The prerequisites are compliance with the minimum guardrail height (between 1,000 and 1,100 mm according to standard NF E85-015; minimum 1,100 mm according to EN 14122-3), a maximum spacing between posts of 1,500 mm, spacing as defined in the standards, and a support surface that must remain permanently stable to ensure the guardrail's stability.

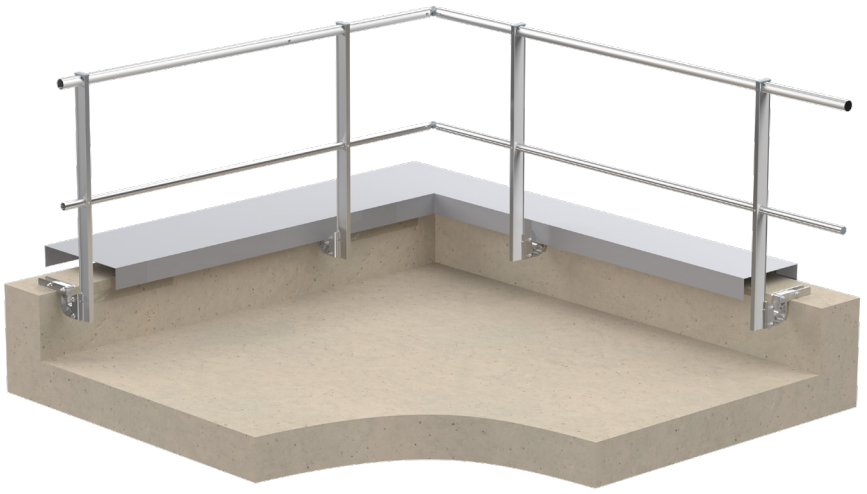

STANDARDS REMINDER
REGULATIONS

The installation of collective protective equipment takes priority over the installation of personal protective equipment (PPE) to fully ensure the safety of workers at height. Workers must have a safe working environment, including fall protection. This protection must be provided by the employer and/or the building owner responsible for its operation. The architect must also take this requirement into account during the building design.

All M-SAFE guardrail systems comply with the latest national and European standards. The systems have successfully undergone the most rigorous tests conducted by nationally and internationally certified independent organizations.

STANDARDS REMINDER

- A guardrail must be installed if the potential fall height exceeds 500 mm.
- The height of the top rail must be 1,100 mm above the walking surface (standard EN 14122-3), or between 1,000 mm and 1,100 mm (standard NF E85-015).
- The clear space between the top rail and the intermediate rail, as well as between the intermediate rail and the toe board, must be less than or equal to 500 mm.
- A toe board with a minimum height of 100 mm must be installed at a maximum distance of 10 mm from the walking surface and the edge of the step.
- For freestanding systems, ballast weights must be:
- 37.5 kg (i.e., 3 counterweights) per support leg (standard NF E85-015),
- 25 kg (i.e., 2 counterweights) per support leg, except for corners and end sections with plugs were.
- 37.5 kg (3 counterweights) per support leg is required.

WARNING: The installation of the freestanding M-SAFE guardrail necessarily requires the presence of a stop at the roof edge.

If the top rail is interrupted, the clear gap between two segments of the top rail must be between 75 mm and 120 mm. If the gap is larger, a safety gate must be installed to ensure continuous fall protection.

Guardrail without toe board

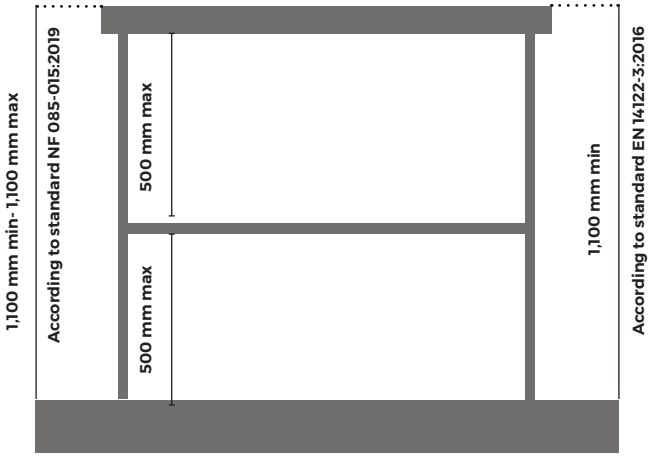

Guardrail with toe board

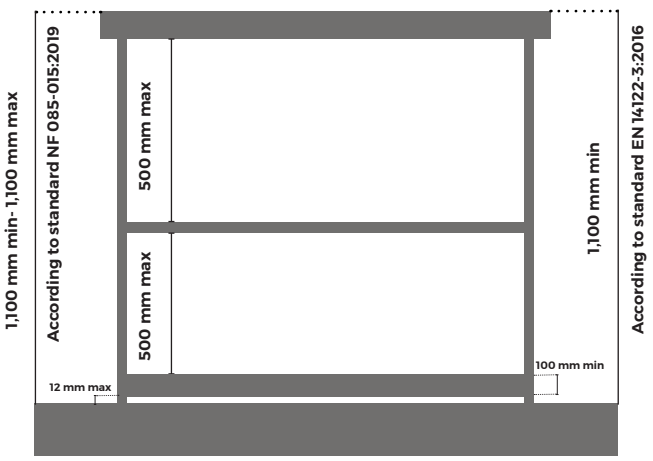

STANDARDS REMINDER

Technical Characteristics According to European Standard EN 14122-3:2016 and French Standard NF E85-015:2019				
	M-SAFE Straight Guardrail M-SAFE Inclined Guardrail			
	NF E85-015:2019		EN ISO 14122-3:2016	
Minimum System Height	1,000- 1,100 mm	1,000- 1,100 mm	≥ 1,100 mm	≥ 1,100 mm
Use of Toe Board	Mandatory if parapet <100 mm			
Maximum Roof Slope	**For freestanding guardrail**: 15° (or 26.79%) **For fixed guardrail:** if slope > 15°, the gap between rails / mid-rails and mid-rails / parapet or toe board must be reduced to 340 mm at the bottom of the slope.			

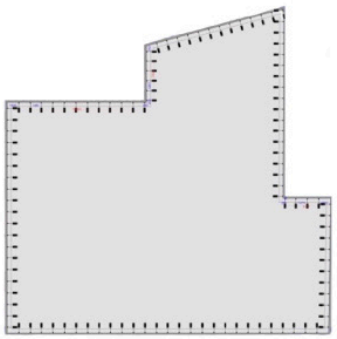

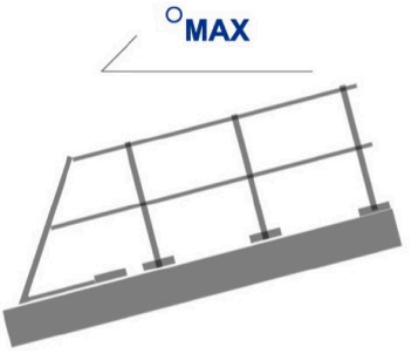

DESIGN PRINCIPLES AND LAYOUTS

The necessary equipment and plans for the installation of the M-SAFE technical guardrail are provided by the design office. The plan must consider the specific features and characteristics of the building and its location. Any deviation by the installer from the installation plan during assembly must be subject to consultation.

MAXIMUM ALLOWABLE INCLINATION

The self-supporting M-SAFE guardrail can be installed on roofs with a slope of up to 15° (i.e., 26.79%). For fixed guardrails, starting from 15° (i.e., 26.79%), the space between the top rail/mid rail and the mid rail/parapet or baseboard must be reduced to 340 mm at the lower part of the slope.

STANDARDS REMINDER USE AND MAINTENANCE

- The person installing the M-SAFE guardrail must be qualified and must comply with the rules related to working at height. They must ensure their own safety (use of a temporary lifeline, PPE, aerial work platform, etc.).
- Before each use, the user must visually inspect the M-SAFE guardrail to ensure it shows no anomalies (impacts, deformations, etc.).
- The M-SAFE guardrail does not require special maintenance; however, a visual inspection must be carried out at least once a year by an authorized person.
- If the M-SAFE guardrail is improperly installed, damaged, or has prevented a fall, its use must be stopped immediately. It must then be inspected and formally approved by an authorized person.
- If the product is resold outside the original country of destination, it is essential for user safety that the reseller provides technical instructions in the language of the country where the product will be used. These documents can be requested by contacting the manufacturer.
- The M-SAFE guardrail is a permanent collective safety protection intended for professional use on flat roofs not accessible to the public.
- The use of the M-SAFE toe board is mandatory if the roof is not equipped with a parapet or if the parapet is less than 100 mm high.
- If the M-SAFE guardrail is installed in an industrial, petrochemical, marine, or polluted coastal environment, it must undergo appropriate surface treatment such as anodizing and powder coating.

STOCKAGE

The raw aluminiumcomponents are packed in direct contact with each other. Rain exposure on unopened packages causes oxidation of these components, which can result in surface stains. These do not affect the quality of the aluminiumbut may impair the aesthetic appearance of the guardrail.

It is recommended to unpack the packages and store the elements separately (no contact between them), or to store the still-packaged packages in a dry place, protected from moisture.





REQUIRED TOOLS



Electric Screwdriver



6 mm Allen key



Rubber mallet

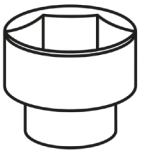

8 mm socket



4 mm Allen key



13 mm and 17 mm wrench

WRENCH SIZE CHART

Size	Standard DIN
M6	10 mm
M8	13mm
M10	17mm
M12	19 mm

TORQUE SETTINGS CHART

Size	Inox
DBS2	5 Nm
M8	6,1 Nm
M10	10 Nm
M12	25 Nm

GUIDE FOR SELECTING THE POSTS

TYPE	Dimensions in mm											
	Flat Mount STRAIGHT		Flat Mount INCLINED		Offset Surface Mount STRAIGHT (internal fixing)		Offset Surface Mount INCLINED (internal fixing)		BE base STRAIGHT		BE base INCLINED	
	MT-S		MT- I		MWO-S		MWO-I		MZO-S MZ100-S MZ160-S		MZO-I MZ100-I MZ160-I	
STANDARDS	85-015	14122-3	85-015	14122-3	85-015	14122-3	85-015	14122-3	85-015	14122-3	85-015	14122-3
Parapet Height	1,010	1,110	1,010	1,110	1,010	1,110	1,010	1,110	1,010	1,110	1,010	1,110
	Min Parapet Height		Min Parapet Height		Min Parapet Height		Min Parapet Height		Min Parapet Height		Min Parapet Height	
1,205					Inc	Inc	Inc	194	Inc	Inc	Inc	141
1,105				89	Inc	177	195	284	Inc	105	141	231
1,005		101	79	179	177	277	274	374	105	205	221	321
900	106	206	173	273	282	382	368	468	210	310	315	415
800	206	306	263	363	382	482	458	558	310	410	405	505
700	306	406	353	453	482	582	548	648	410	510	495	595
600	406	506	443	543	582	682	638	738	510	610	585	685
500	506	606	533	633	682	782	728	828	610	710	675	775
400	606	706	623	723	782	882	818	918	710	810	765	865
300	706	806	713	813	882	982	908	1,008	810	910	855	955
Minimum parapet height for HANDRAIL only	463	563	482	582	475	575	612	712	435	535	529	629

MINIMUM PARAPET HEIGHT	
MT-S (flat straight)	-
MT-I (flat inclined)	-
MWO-S (offset surface mount straight)	180 mm
MWO-I (offset surface mount inclined)	198 mm
MZ-S (Z straight)	110 mm
MZ-I (Z inclined)	150 mm
MF-S (self-supporting straight)	20 mm
MF-I (self-supporting inclined)	20 mm
MW-S	120 mm

* If needed, the post can slide within the bases (surface mount/Z bracket) or be cut on site. You can also use the offset mid-rail system with adjustable fixing to adjust the height on site, while still complying with the distances required by the standards.

NEW FEATURES

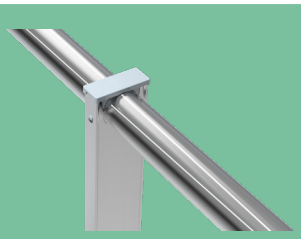

POST/ RAIL FIXING WITH PLUG, WITHOUT SCREWS

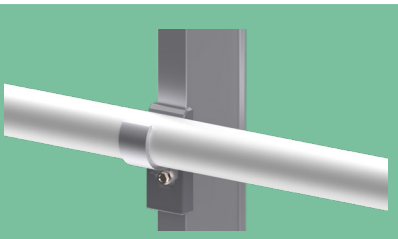

ADJUSTABLE FIXING OF THE MID RAIL

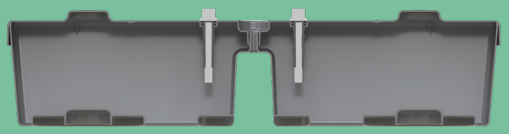

COUNTERWEIGHT TO USE IN MARKING

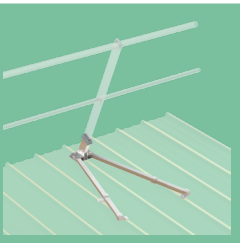

STEEL DECK FOR ALL TYPES OF WAVES



"I" SECTION POST

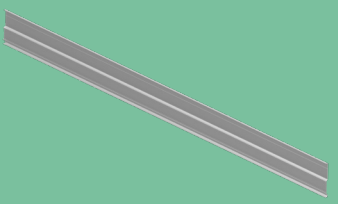

180 MM TOE BOARD

GENERAL PRINCIPLES
POST CAPS





NEW FEATURES

Thanks to our new snap-on post cap, we have eliminated the use of screws. The tube is fixed inside the post.

Once the installation is checked and adjusted, the cap is installed using a rubber mallet, ensuring that the outer clips of the cap are fully engage into the slots provided on the post.
Once the cap is installed, any movement or rotation of the handrail is locked.

Therefore, the use of a screw is not necessary for the rail/post connection.

MID- RAIL

We offer two mid-rail systems in our **M-SAFE** range: through-passing or adjustable.

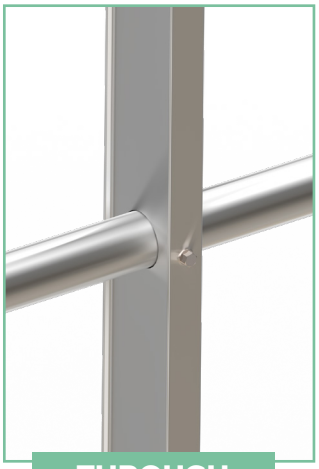

THROUGH

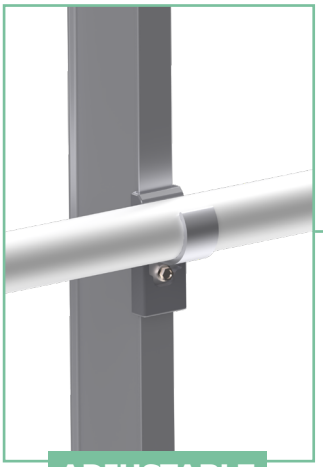

ADJUSTABLE

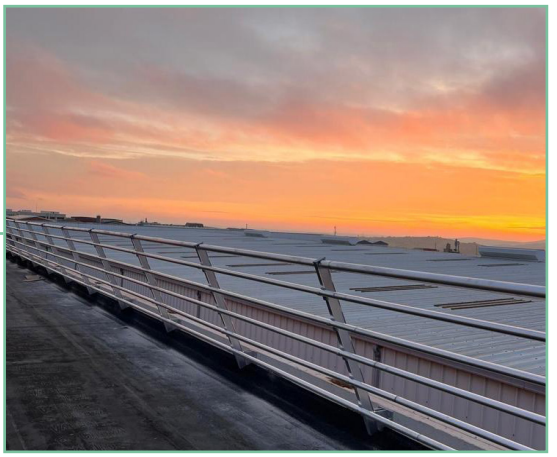

Two distinct systems:

- **Adjustable**: sliding mid-rail support part mounted on the post without drilling
- **Through-passing**: the mid-rail passes through the post via a pre-drilled hole

Components in the range:





Round aluminiumtop rail Ø47 mm with swaged end
Round aluminiummid-rail Ø35 mm with swaged end

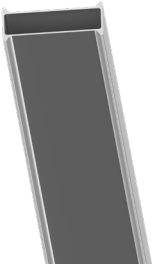

68 x 25 mm post

GENERAL PRINCIPLES

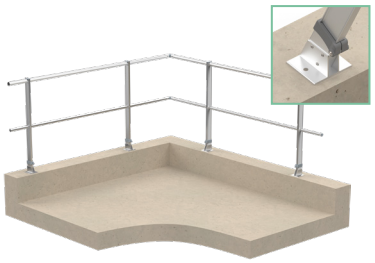

M-SAFE: MT & MTA
Flat-mounted aluminium guardrail

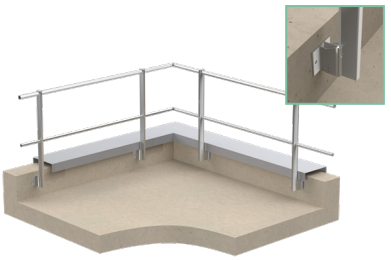

M-SAFE: MW - MWO
Aluminum guardrail with wall-mounted fixing

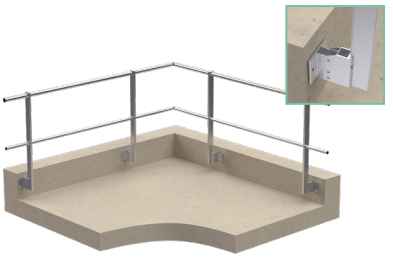

M-SAFE: MWOT
Temporary surface-mounted aluminium guardrail

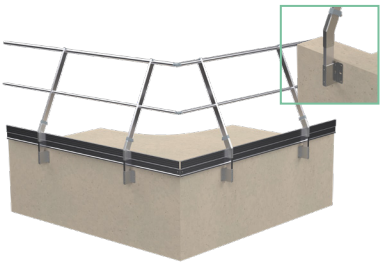

M-SAFE: MWOE
Aluminum guardrail with exterior surface mounting on concrete

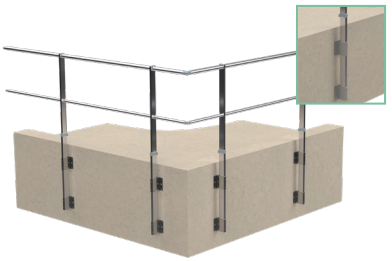

M-SAFE: MWOEL
Aluminum guardrail with exterior surface mounting on aerated concrete



M-SAFE: MWOEM
Aluminum guardrail with exterior surface mounting on facade cladding

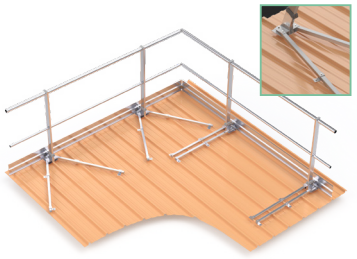

M-SAFE: MM & MMA
Aluminum guardrail with steel deck mounting

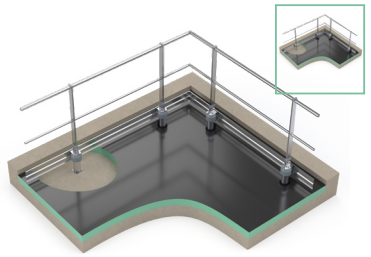

M-SAFE: MD & MDA
Aluminum guardrail mounted on waterproofing slab using D base

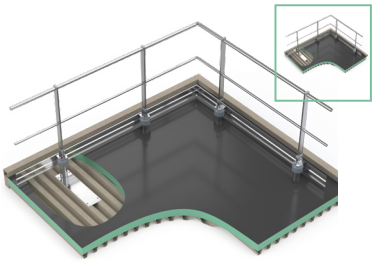

M-SAFE: MMW & MMWA
Aluminum guardrail mounted on waterproof deck using BE base

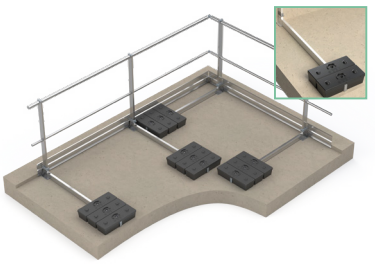

M-SAFE: MF & MFA
Self-supporting aluminium guardrail

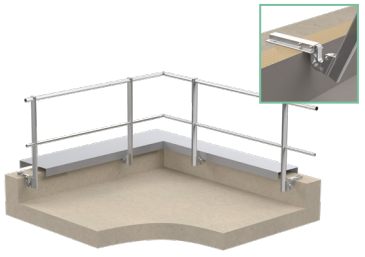

M-SAFE: MZ & MZA
Aluminum guardrail mounted under coping using Z base

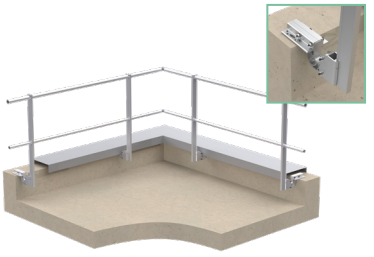

M-SAFE: MZT
Aluminum guardrail mounted under coping using temporary Z base

GENERAL PRINCIPLES
TOE BOARD

In the case of a parapet height less than 100 mm, we remind you that the installation of a toe board is mandatory. We offer a 180 mm high aluminiumtoe board.

The profile is made of extruded aluminum, while the other accessories are made of steel with anti-corrosion treatment, except for the aluminiumtoe board.

Toe board fixing support for D base and BE
REF. 33011

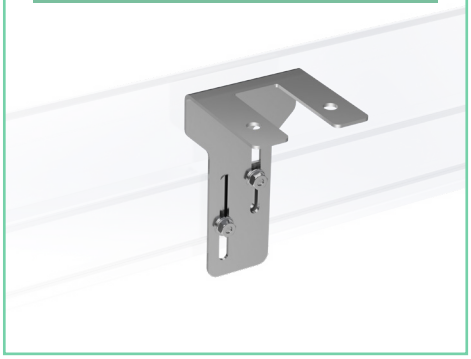

Standard toe board fixing support
REF. 33013



Toe board fixing support for steel deck
REF. 33012

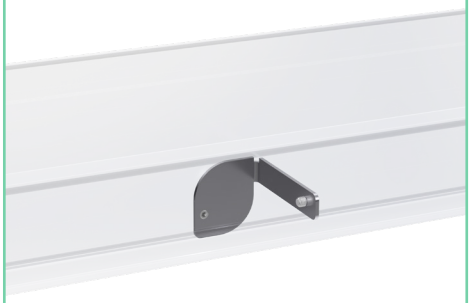

Toe board cap
REF. 35108



Toe board angle
REF. 33007



Toe board joint
REF. 33008



TYPES OF CONFIGURATION

The classification of configurations for the **M-SAFE** technical guardrail is based on the post: “S” indicates straight, and “I” indicates inclined.

FLAT FIXING					
MODEL	INCLINATION		POST		
			1 (Top rail)	2 (Top rail + mid rail)	3 (Top rail + mid rail + toe board)
MT	S (Straight)				
	I (Inclined)				

SURFACE MOUNTED					
MODEL	INCLINATION		POST		
			1 (Top rail)	2 (Top rail + mid rail)	3 (Top rail + mid rail + toe board)
MW	S (Straight)				
	I (Inclined)	-			

OFFSET FACE MOUNTED					
MODEL	INCLINATION		POST		
			1 (Top rail)	2 (Top rail + mid rail)	3 (Top rail + mid rail + toe board)
MWO	S (Straight)				
	I (Inclined)				

EXTERNAL FACE MOUNTED ON AERATED CONCRETE					
MODEL	INCLINATION		POST		
			1 (Top rail)	2 (Top rail + mid rail)	3 (Top rail + mid rail + toe board)
MWOE	S (Straight)				
	I (Inclined)				

EXTERNAL FACE MOUNTED ON CLADDING					
MODEL	INCLINATION		POST		
			1 (Top rail)	2 (Top rail + mid rail)	3 (Top rail + mid rail + toe board)
MWOEM	S (Straight)				
	I (Inclined)				

TYPES OF CONFIGURATION

The classification of configurations for the **M-SAFE** technical guardrail is based on the post: “S” indicates straight, and “I” indicates inclined.

Z BASE					
MODEL	INCLINATION		POST		
			1 (Top rail)	2 (Top rail + mid rail)	3 (Top rail + mid rail + toe board)
MZ	S (Straight)				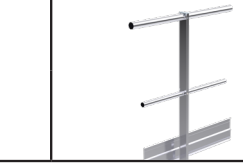
	I (Inclined)				

SURFACE MOUNTING					
MODEL	INCLINATION		POST		
			1 (Top rail)	2 (Top rail + mid rail)	3 (Top rail + mid rail + toe board)
MM	S (Straight)	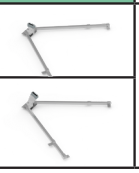		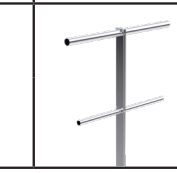	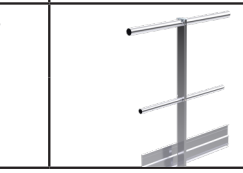
	I (Inclined)				

OFFSET SURFACE MOUNTING (D BASE)					
MODEL	INCLINATION		POST		
			1 (Top rail)	2 (Top rail + mid rail)	3 (Top rail + mid rail + toe board)
MD	S (Straight)	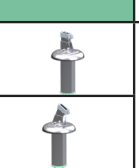			
	I (Inclined)				

EXTERIOR SURFACE MOUNTING ON AERATED CONCRETE					
MODEL	INCLINATION		POST		
			1 (Top rail)	2 (Top rail + mid rail)	3 (Top rail + mid rail + toe board)
MMW	S (Straight)	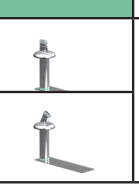		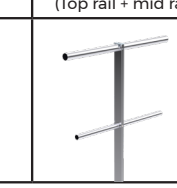	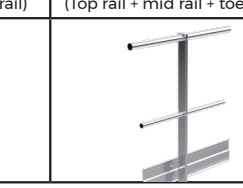
	I (Inclined)				

EXTERIOR SURFACE MOUNTING ON CLADDING					
MODEL	INCLINATION		POST		
			1 (Top rail)	2 (Top rail + mid rail)	3 (Top rail + mid rail + toe board)
MF	S (Straight)			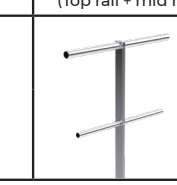	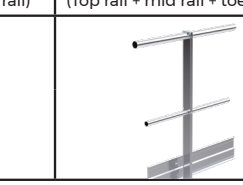
	I (Inclined)				

M-SAFE GUARDRAIL FLAT MOUNTING
REF. MT

STANDARDS 85-015: 2019 and EN ISO 14122-3: 2016

The M-SAFE flat-mounted guardrail is a collective fall protection system that can be fixed onto metal structures, parapets, or slabs. Flat mounting remains one of the most economical solutions to secure a roof or terrace. Simple assembly systems: rail/post without screws using a snap-on cap, tapered ends on rails and mid rails, pre-drilled posts.

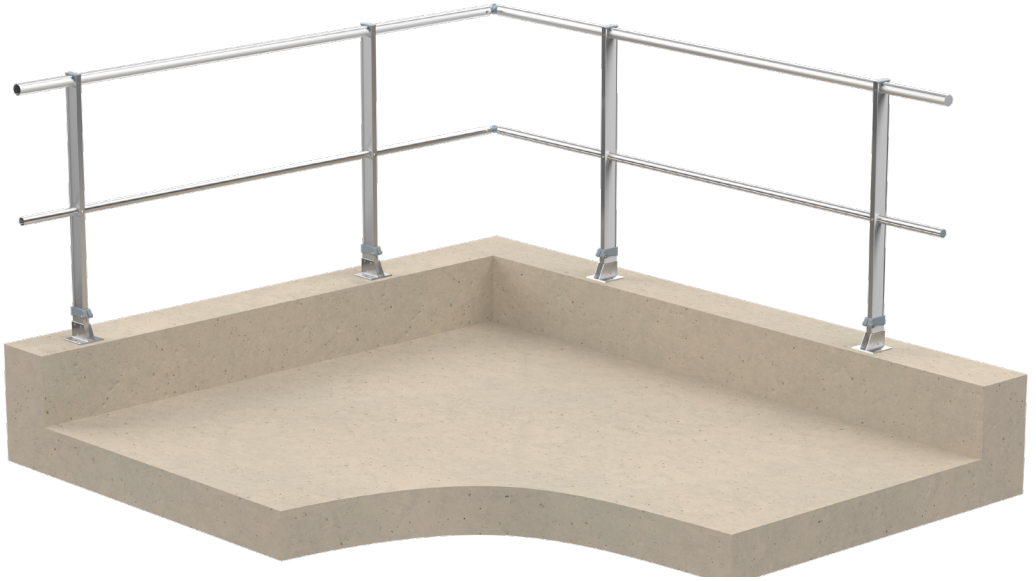

Ref.	Post	Composition
MT-S1	STRAIGHT	Top rail
MT-S2		Top rail + mid rail
MT-I1	INCLINED	Top rail
MT-I2		Top rail + mid rail
MT-F1	FOLDING	Top rail
MT-F2		Top rail + mid rail

M-SAFE GUARDRAIL FLAT MOUNTING
REF. MT

POST DIMENSIONS

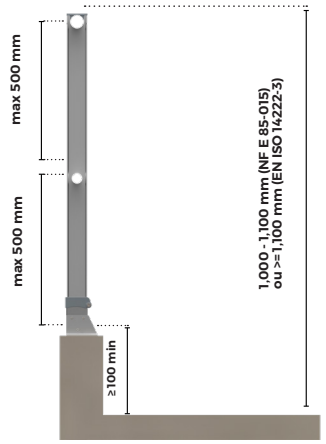

STRAIGHT POST

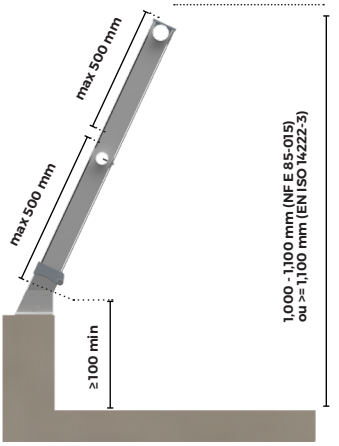

INCLINED POST

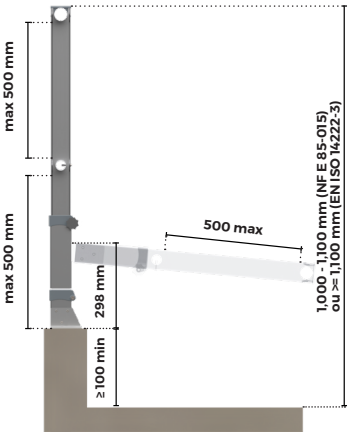

FOLDING POST

BASES

The inclination of the M-SAFE guardrail (Ref. MT) is achieved using the base, which is available in either a straight or 25° inclined version.

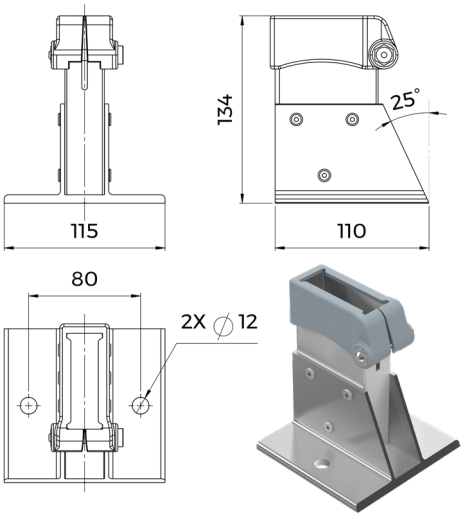

STRAIGHT BASE- REF. 32929

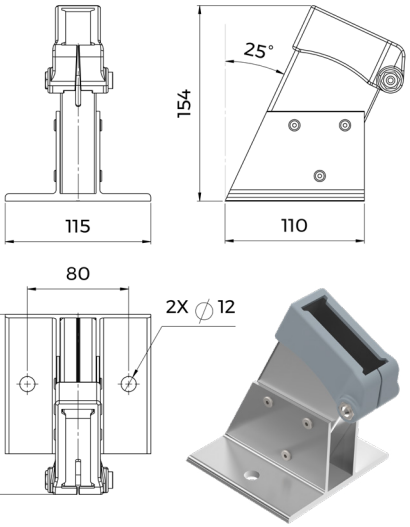

INCLINED BASE- REF. 32930

MID RAIL M-SAFE

The M-SAFE flat-mounted guardrail (Ref. MT) is available with two mid-rail versions: through or adjustable.

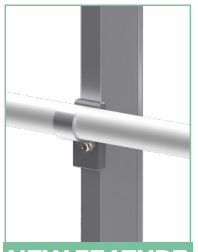

NEW FEATURE

M-SAFE GUARDRAIL FLAT MOUNTING
REF. MT
ASSEMBLY PRINCIPLES

FIXATION

- Maximum spacing between posts: 1,500 mm
- Minimum width of the parapet: 125 mm
- Minimum distance from the base to the edge of the parapet: 60 mm
- Base mounting into non-cracked concrete C20/C25 using 2 stainless steel M10 anchors (not supplied, refer to load specifications in the assembly instructions)
- Use of self-drilling screw Ø4.8 x 32 mm stainless steel with H head:
  - Fixation the mid rail to the post
  - Fixing accessories (corners, caps, wall mounts) to the rails and mid rails
  - Fixing the tapered ends of rails and mid rails

TOE BOARD OPTION

In cases where the parapet height is less than 100 mm, the use of a toe board is mandatory.

WARNING: Before any use, please refer to the corresponding instructions.

The toe board is made of aluminum, 180 mm high.

- The toe board is fixed to the post using a stainless steel self-drilling screw Ø4.8 x 32 mm with a hex head.
- The toe board is attached to the plinth profile using 2 headless screws M8x10.

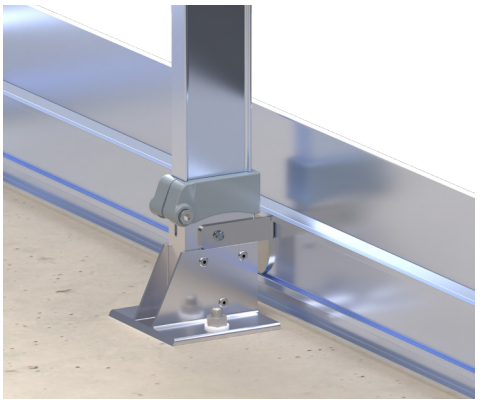

TECHNICAL SPECIFICATIONS

MT							
Estimated weight	**Upright weight kg/ml**				**Inclined weight kg/ml**		
	1.77				1.82		
DOWEL LOAD ACCORDING TO UPRIGHT HEIGHT							
Post height in mm	1,300	1,100	1,000	900	800	600	400
Load at the ELS on the ankle group in DaN	1,064	900	818	736	655	491	327
Estimated assembly time	100 m per day (2 people)						
Required screws	C20/C25 non-cracked concrete parapet fixing: 2 M10 stainless steel dowels (not included)						
	Upright: ALLEN M8X45 STAINLESS STEEL screw						
	Sub-rail + accessories: self-drilling screw Ø4.8 x 32 INOX						
	Plinth: self-drilling screw Ø4.8 x 32 INOX						

Powder coating option for aluminiumparts available on request.

M-SAFE GUARDRAIL SURFACE MOUNTING
REF. MW

STANDARDS 85-015: 2019 and EN ISO 14122-3: 2016

The M-SAFE surface-mounted guardrail is the simplest and most economical to comply with collective protection regulations against falls from height on terraces inaccessible to the public. It is fixed inside or outside the parapet.
In the case of a canopy type offset, we offer the surface-mounted base offset up to 80 mm (other offsets on request).
Simple mounting systems: screwless rail/upright with clip-on cap, narrowed rail ends and under rails, pre-drilled upright.

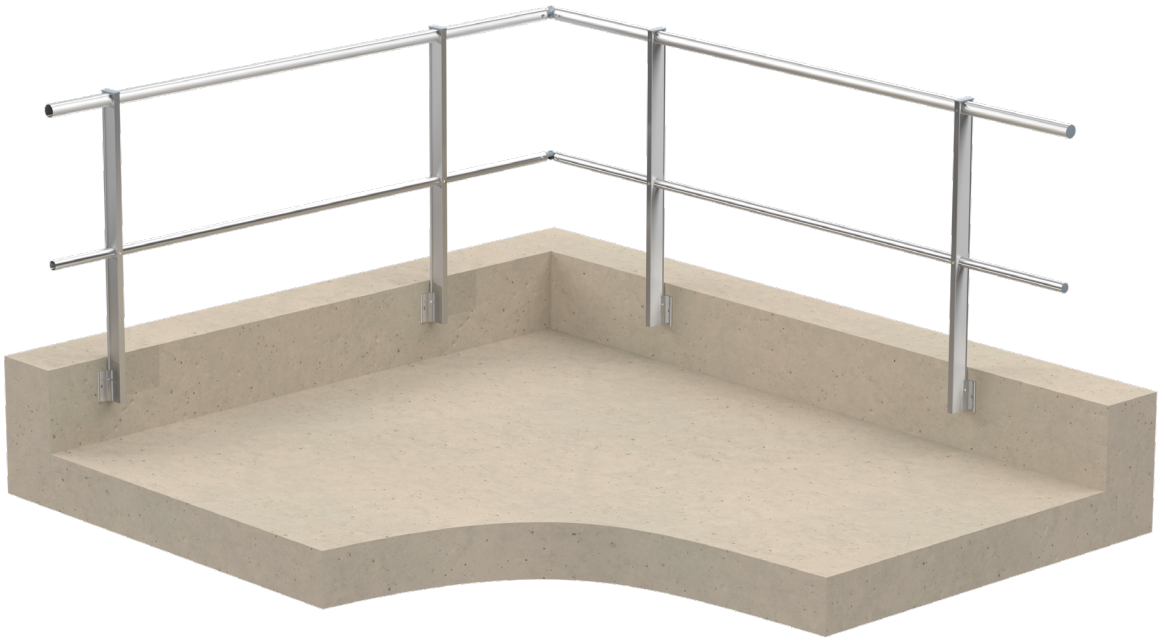

Ref.	Post	Composition
MW-S1	STRAIGHT	Top rail
MW-S2		Top rail + mid rail
MW-S3		Top rail + sub rail + toe board
MW-I1	INCLINED	Top rail
MW-I2		Top rail + mid rail
MW-I3		Top rail + sub rail + toe board
MW-F1	FOLDING	Top rail
MW-F2		Top rail + mid rail
MW-F3		Top rail + sub rail + toe board

M-SAFE GUARDRAIL SURFACE MOUNTING
REF. MW

POST DIMENSIONS

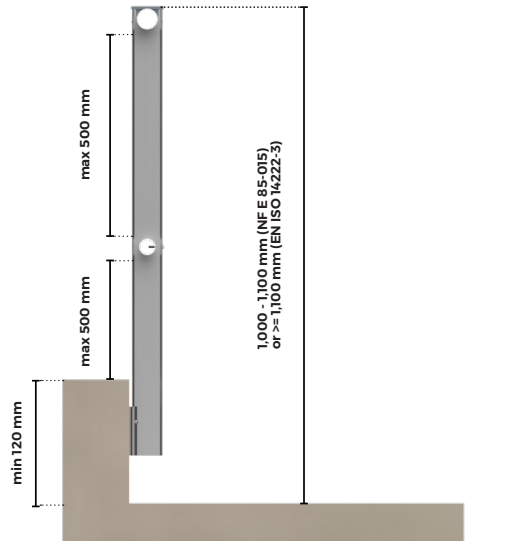

STRAIGHT POST

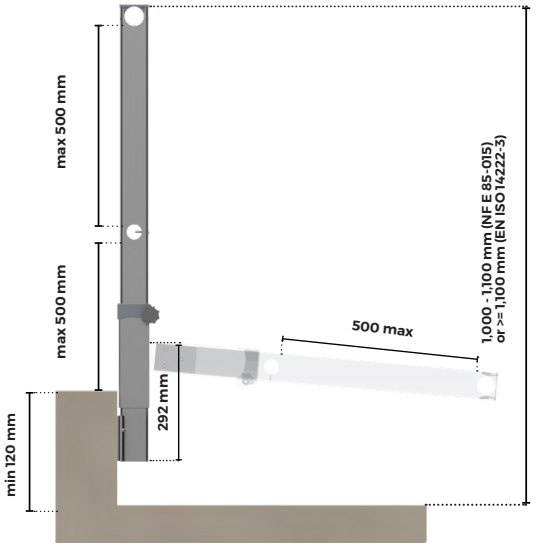

FOLDING POST

BASES

The M-SAFE base (Ref. MW) surface-mounted without offset is only available in a straight model.

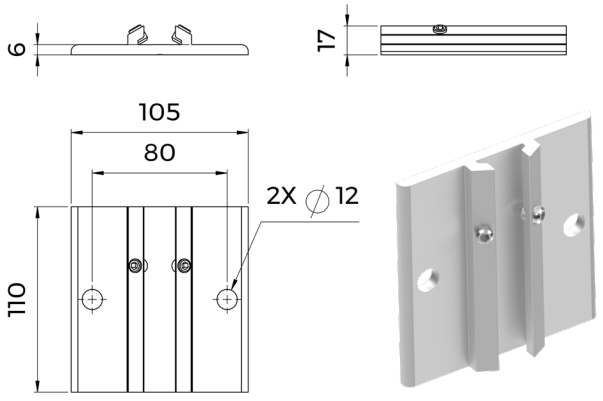

BASE FOR FITTING - REF. 32912

M-SAFE MID RAIL

The M-SAFE surface-mounted guardrail (Ref. MW) is available with two sub-rail versions: through-mounted or adjustable.

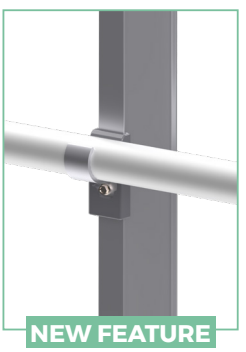

NEW FEATURE

M-SAFE GUARDRAIL SURFACE MOUNTING

REF. MW

ASSEMBLY PRINCIPLES

FIXATION

- Maximum spacing between posts: 1,500 mm
- Minimum width of the parapet: 125 mm
- Minimum height of the parapet with offset: 180 mm (140 mm + 40 mm canopy drop)
- Drilling at least 75 mm from the top of the parapet
- Fixing the bases in uncracked C20/C25 concrete via 2 M10 stainless steel dowels (not supplied, refer to the loads according to the assembly instructions)
- Use of the Ø4.8 x 32 mm stainless steel H head self-drilling screw:
  - Fixing the sub-rail to the upright
  - Attaching accessories (corners, caps, wall fixings) to rails and sub-rails
  - Fixing the constricted ends of rails and sub-rails

TECHNICAL SPECIFICATIONS

MW							
Estimated weight	**Upright weight kg/ml**				**Inclined weight kg/ml**		
	2.06				2.11		
DOWEL LOAD ACCORDING TO UPRIGHT HEIGHT							
Post height in mm	1,300	1,100	1,000	900	800	600	400
Load at the ELS on the ankle group in DaN	974	810	728	647	565	401	237
Estimated assembly time	100 m per day (2 people)						
Required screws	C20/C25 non-cracked concrete parapet fixing: 2 M10 stainless steel dowels (not Included)						
	Sub-rail + accessories: self-drilling screw Ø4.8 x 32 INOX						
	Upright: ALLEN M8X45 STAINLESS STEEL screw						

Powder coating option for aluminiumparts available on request.

M-SAFE OFFSET SURFACE MOUNTING
REF. MWO

STANDARDS 85-015: 2019 and EN ISO 14122-3: 2016

The M-SAFE offset surface-mounted guardrail is a simple and economical solution to comply with collective protection regulations against falls on terraces inaccessible to the public.
It is fixed inside or outside the parapet with a surface-mounted base offset up to 80 mm (other offsets on request).
Simple mounting systems: screwless rail/upright with clip-on cap, narrowed rail ends and under rails, pre-drilled upright.

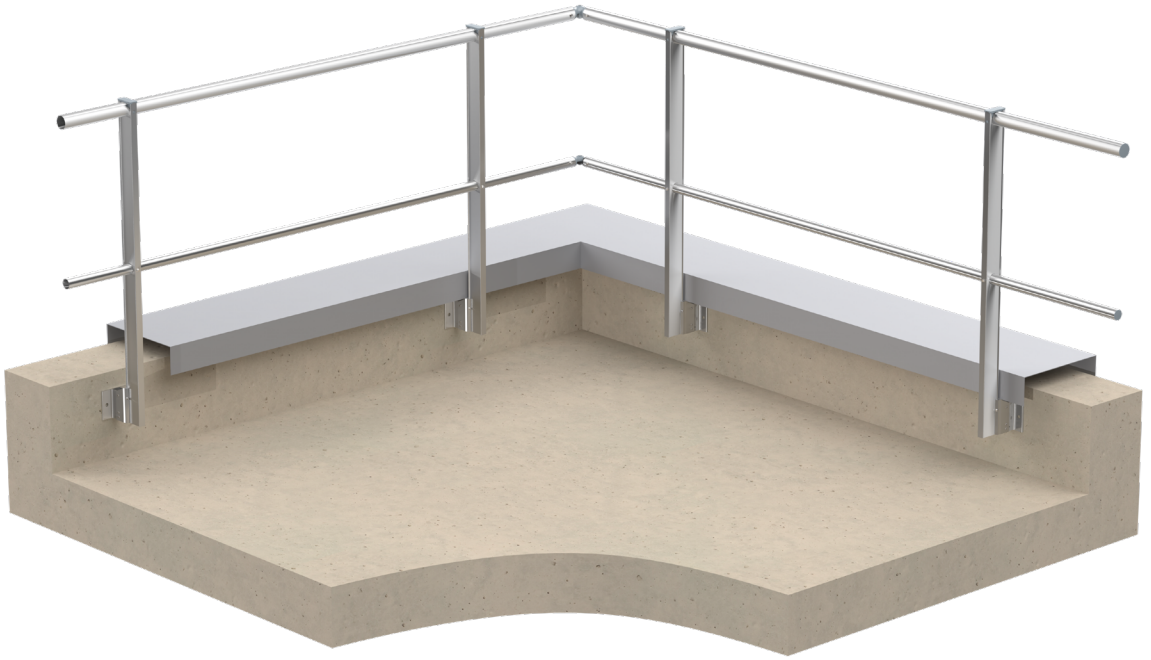

Ref.	Post	Composition
MWO-S1	STRAIGHT	Top rail
MWO-S2		Top rail + mid rail
MWO-S3		Top rail + sub rail + toe board
MWO-I1	INCLINED	Top rail
MWO-I2		Top rail + mid rail
MWO-I3		Top rail + sub rail + toe board
MWO-F1	FOLDING	Top rail
MWO-F2		Top rail + mid rail
MWO-F3		Top rail + sub rail + toe board

M-SAFE OFFSET SURFACE MOUNTING REF. MWO

POST DIMENSIONS

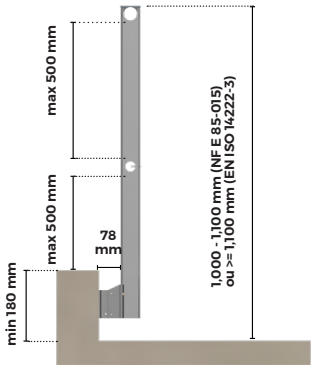

STRAIGHT POST

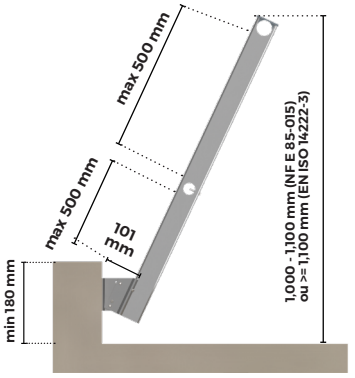

INCLINED POST

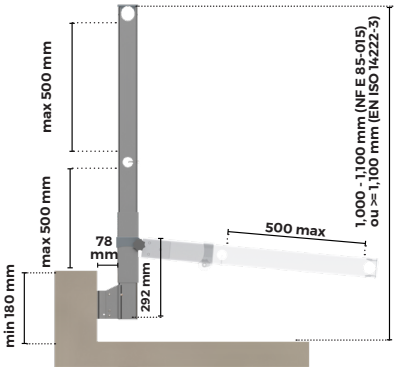

FOLDING POST

BASES

The inclination of the M-SAFE guardrail (Ref. MWO) is carried out using the base available in straight or inclined 25° version.
One base for two versions: the inclined surface-mounted base is used for fixing with or without offset.

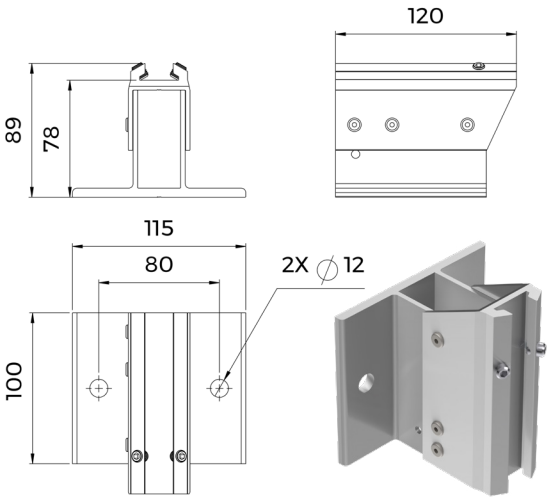

STRAIGHT BASE- REF. 32911

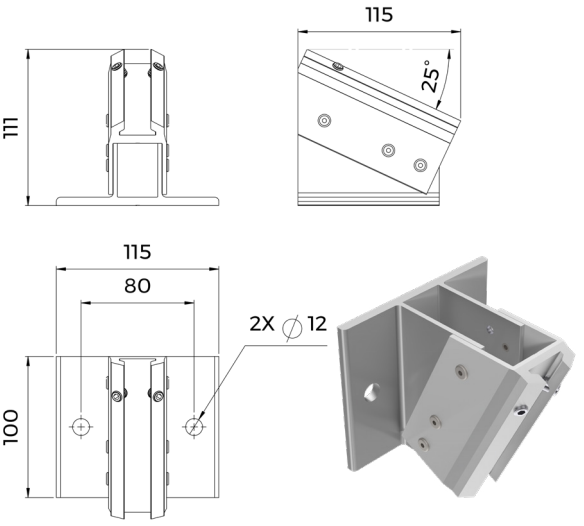

INCLINED BASE- REF. 32910

M-SAFE MID RAIL

The M-SAFE surface-mounted guardrail (Ref. MW) is available with two sub-rail versions: through-mounted or adjustable.

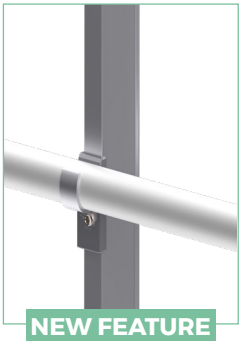

NEW FEATURE

M-SAFE OFFSET SURFACE MOUNTING REF. MWO

ASSEMBLY PRINCIPLES

FIXING

- Maximum distance between uprights: 1,500 mm
- Minimum height of the parapet with offset: 180 mm (140 mm + 40 mm canopy drop)
- Drilling at least 75 mm from the top of the parapet
- Fixing the bases in uncracked C20/C25 concrete via 2 M10 stainless steel dowels (not supplied, refer to the loads according to the assembly instructions)
- Use of the Ø4.8 x 32 mm stainless steel H head self-drilling screw:
  - Fixing the sub-rail to the upright
  - Attaching accessories (corners, caps, wall fixings) to rails and sub-rails
  - Fixing the constricted ends of rails and sub-rails

TECHNICAL SPECIFICATIONS

MWO							
Estimated weight	**Upright weight kg/ml**			**Inclined weight kg/ml**		**Folding weight kg/ml**	
	1.77			1.82		1.99	
DOWEL LOAD ACCORDING TO UPRIGHT HEIGHT							
Post height in mm	1,300	1,100	1,000	900	800	600	400
Load at the ELS on the ankle group in DaN	1,080	900	810	720	630	450	270
Estimated assembly times	100 m per day (2 people)						
Required screws	C20/C25 non-cracked concrete parapet fixing: 2 M10 stainless steel dowels (not Included)						
	Sub-rail + accessories: self-drilling screw Ø4.8 x 32 INOX						
	Upright: ALLEN M8X45 STAINLESS STEEL screw						

Powder coating option for aluminiumparts available on request.

M-SAFE GUARDRAIL TEMPORARY SURFACE MOUNT FIXATION
REF. MWOT

STANDARDS EN ISO 14122-3: 2016

The M-SAFE aluminium guardrail with temporary offset wall mounting is a simple and economical solution to comply with regulations for terraces inaccessible to the public. The base allows the installation of a temporary guardrail during construction work without requiring a later change of the base, only the post, thus enabling savings in both cost and assembly time.
Mounting can be done inside or outside the parapet with an offset up to 113 mm.
The assembly system for the final handrail is simple and easy. The handrail does not require screws; it is fixed with a plug. The handrails and intermediate guardrails have reduced ends for linear connection, and the posts are pre-drilled (other offset dimensions are available upon request).

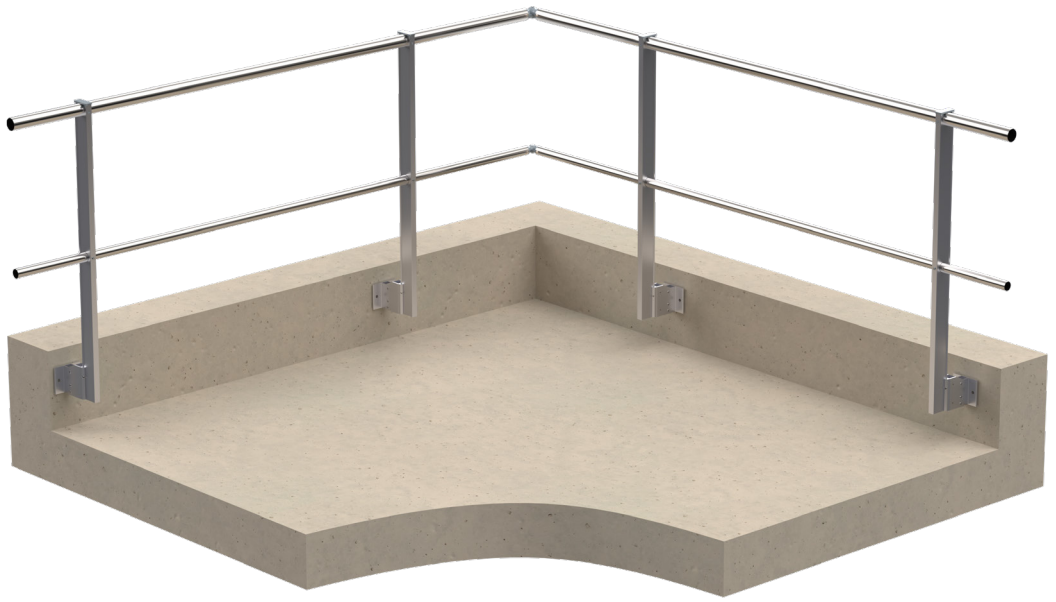

Ref.	Post	Composition
MWOT-S1	STRAIGHT	Top rail
MWOT-S2		Top rail + mid rail
MWOT-S3		Top rail + sub rail + toe board

M-SAFE GUARDRAIL TEMPORARY SURFACE MOUNT FIXATION REF. MWOT

POST DIMENSIONS

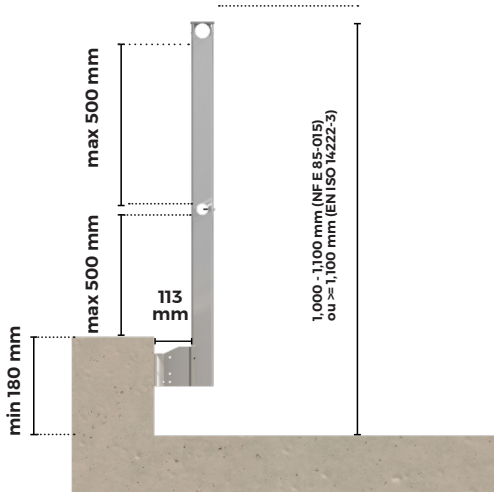

STRAIGHT POST

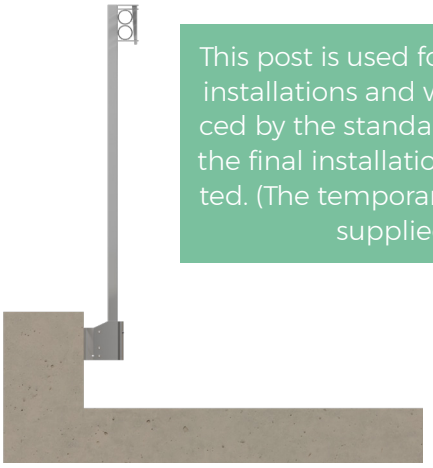

This post is used for temporary installations and will be replaced by the standard post once the final installation is completed. (The temporary post is not supplied)

TEMPORARY POST

BASES

Temporary post 30 x 30 (not supplied) compatible with the temporary base. Transition from the temporary to the permanent system without needing to remove the base: install the permanent M-SAFE post at the front of the base, then safely remove the temporary post.

The temporary base also allows installation of the permanent guardrail with a greater offset than the standard base, up to 113 mm in the straight version.

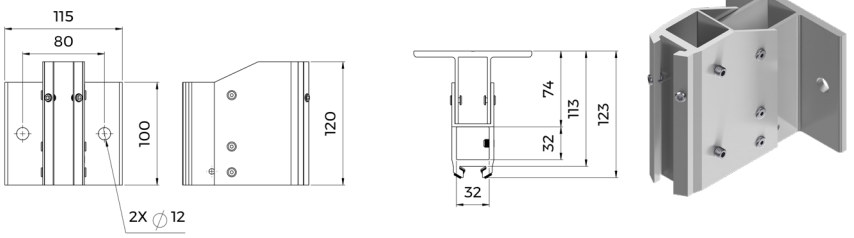

STRAIGHT BASE- REF. 35512

M-SAFE MID RAIL

The M-SAFE guardrail with temporary surface mounting (Ref. MWOT) is available in two versions of mid rail: through or adjustable.

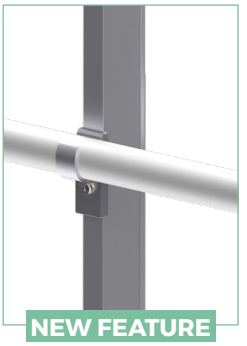

NEW FEATURE

M-SAFE GUARDRAIL TEMPORARY SURFACE MOUNT FIXATION REF. MWOT

ASSEMBLY PRINCIPLES

FIXING

- Maximum spacing between posts: 1,500 mm
- Minimum parapet height with offset: 180 mm (140 mm + 40 mm overhang of coping)
- Drilling at least 75 mm from the top of the parapet
- Fixing the bases into non-cracked C20/C25 concrete using 2 stainless steel M10 anchors (not supplied; refer to load specifications in the assembly instructions)
- Use of Ø4.8 x 32 mm stainless steel self-drilling screws with H-head for:
  - Fixing the mid rail to the post
  - Fixing accessories (corners, plugs, wall mounts) to rails and mid rails
  - Fixing the narrowed ends of rails and mid rails

TECHNICAL SPECIFICATIONS

MWOT							
Estimated weight	**Straight post weight kg/ml**						
	1.77						
DOWEL LOAD ACCORDING TO UPRIGHT HEIGHT							
Post height in mm	1,300	1,100	1,000	900	800	600	400
Load at the ELS on the ankle group in DaN	1,080	900	810	720	630	450	270
Estimated assembly time	100 m per day (2 people)						
Required screws	Fixing on non-cracked concrete parapet C20/C25: 2 stainless steel M10 anchors per base (not included)						
	Mid rail + accessories: Ø4.8 x 32 mm stainless steel self-drilling screws A2						
	POST: 2 stainless steel M8x10 stud bolts A2						

Powder coating option for aluminiumparts available on request.

M-SAFE GUARDRAIL EXTERNAL SURFACE MOUNT FIXATION ON CONCRETE REF. MWOE

STANDARDS 85-015: 2019 and EN ISO 14122-3: 2016

The M-SAFE guardrail with external surface mounting (Ref. MWOE) is a fastening system designed for situations where fixing inside the terrace is technically impossible.

Simple assembly system: rail/post without screws, secured with snap-on plugs; narrowed ends on rails and mid rails; pre-drilled posts.



Ref.	Post	Composition
MWOE-S1	STRAIGHT	Top rail
MWOE-S2		Top rail + mid rail
MWOE-S3		Top rail + sub rail + toe board
MWOE-I1	INCLINED	Top rail
MWOE-I2		Top rail + mid rail
MWOE-I3		Top rail + sub rail + toe board

M-SAFE GUARDRAIL EXTERNAL SURFACE MOUNT FIXATION ON CONCRETE REF. MWOE

POST DIMENSIONS

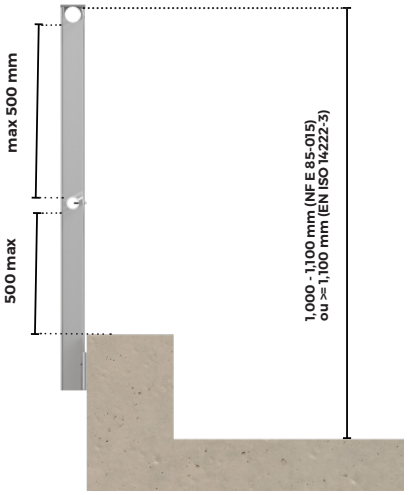

STRAIGHT POST

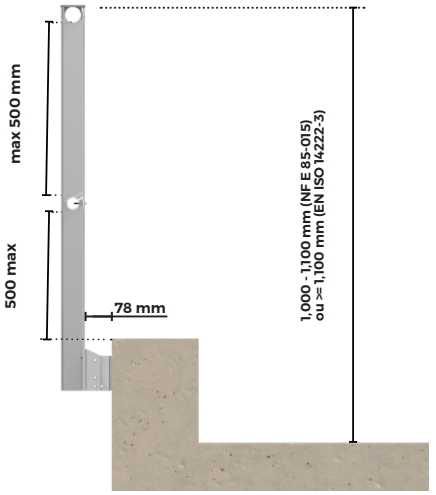

OFFSET POSTS

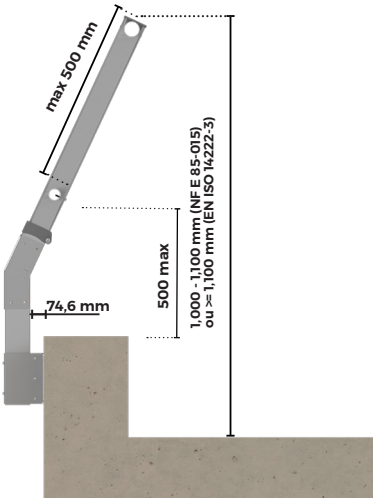

INCLINED POST

BASES

The inclination of the M-SAFE guardrail (Ref. MWOE) is achieved through the base, which is available in either a straight version or a 25° inclined version.

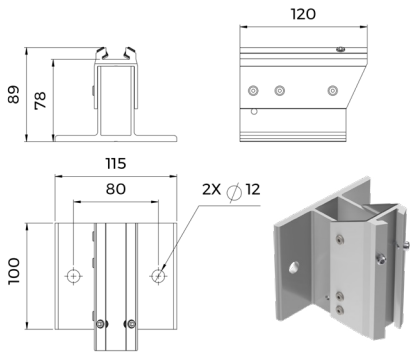

STRAIGHT BASE - REF. 32911

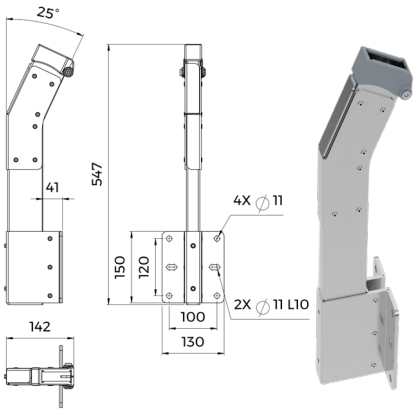

SINGLE INCLINED BASE - REF. 36717

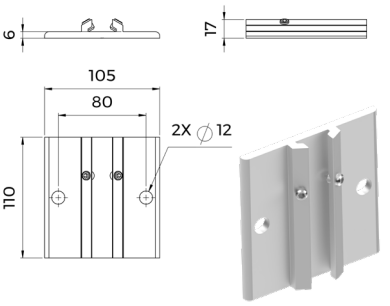

SURFACE MOUNT BASE - RÈF 32912

M-SAFE MID RAIL

The M-SAFE guardrail with temporary surface mounting (Ref. MWOT) is available in two versions of mid rail: through or adjustable.

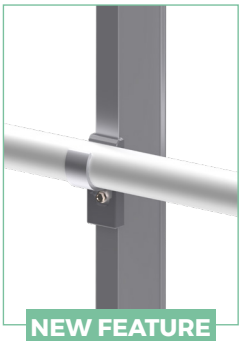

NEW FEATURE

M-SAFE GUARDRAIL EXTERNAL SURFACE MOUNT FIXATION ON CONCRETE REF. MWOE

ASSEMBLY PRINCIPLES

FIXING

- Maximum spacing between posts: 1,500 mm
- Drilling at least 75 mm from the top of the parapet
- Fixing the bases into non-cracked C20/C25 concrete using 2 stainless steel M10 anchors (not supplied; refer to load specifications in the assembly instructions)
- Use of Ø4.8 x 32 mm stainless steel self-drilling screws with H-head for:
  - Fixing the mid rail to the post
  - Fixing accessories (corners, plugs, wall mounts) to rails and mid rails
  - Fixing the narrowed ends of rails and mid rails

TOE BOARD OPTION

If the parapet height is less than 100 mm, the use of a toe board is mandatory.

WARNING: Before any use, please refer to the corresponding instructions.

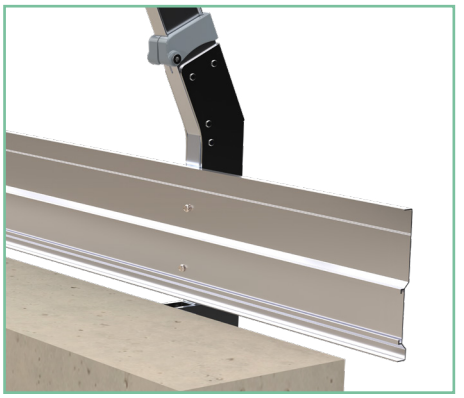

The toe board is made of aluminium and 180 mm high.

- It is fixed to the post using a Ø4.8 x 32 mm stainless steel hex-head self-drilling screw.
- Toe board joints and corners are secured using 2 headless M8x10 screws.

TECHNICAL SPECIFICATIONS

MWOE							
Estimated weight	**Straight post kg/ml**		**Offset post kg/ml**			**Inclined post kg/ml**	
	1.77		2.34			3.72	
DOWEL LOAD ACCORDING TO UPRIGHT HEIGHT							
Post height in mm	1,300	1,100	1,000	900	800	600	400
Load at the ELS on the ankle group in DaN	1,064	900	818	736	655	491	327
Estimated assembly time	100 m per day (2 people)						
Required screws	Fixing on non-cracked concrete parapet C20/C25: 2 stainless steel M10 anchors per base (not included)						
	Post: M8x45 stainless steel Allen screws A2						
	Toe board: 1 stainless steel Ø4.8 x 32 mm self-drilling screw A2						
	Mid rail + accessories: stainless steel Ø4.8 x 32 mm self-drilling screws A2						

Powder coating option for aluminiumparts available on request.

M-SAFE GUARDRAIL EXTERNAL SURFACE MOUNT FIXATION ON AERATED CONCRETE
REF. MWOEL

STANDARDS 85-015: 2019 and EN ISO 14122-3: 2016

The M-SAFE guardrail with external surface mounting, Ref. MWOEL, is a system specially designed for fixing onto aerated concrete. The assembly system is simple and easy. The handrail does not require screws; it is secured with a plug. The handrails and intermediate posts have tapered ends for seamless alignment, and the posts are pre-drilled.

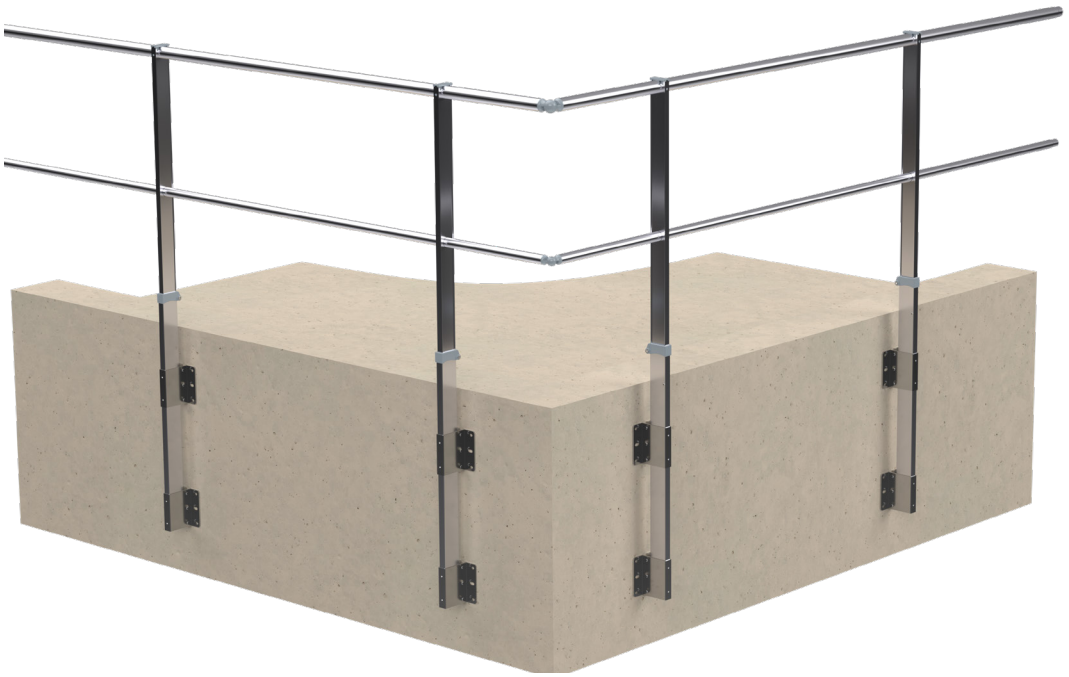

Ref.	Post	Composition
MWOEL-S1	STRAIGHT	Top rail
MWOEL-S2		Top rail + mid rail
MWOEL-S3		Top rail + sub rail + toe board
MWOEL-I1	INCLINED	Top rail
MWOEL-I2		Top rail + mid rail
MWOEL-I3		Top rail + sub rail + toe board

M-SAFE GUARDRAIL EXTERNAL SURFACE MOUNT FIXATION ON AERATED CONCRETE
REF. MWOEL

POST DIMENSIONS

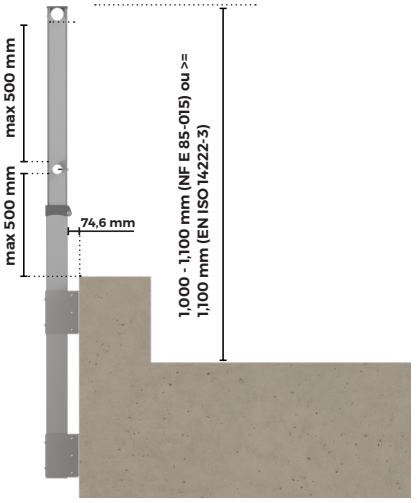

STRAIGHT POST

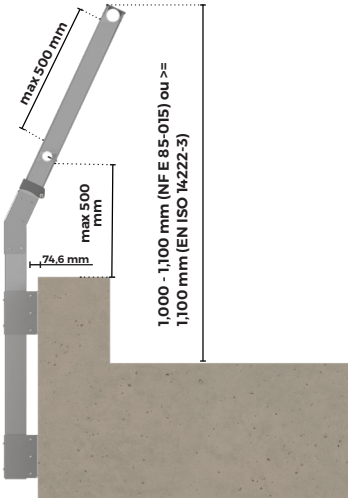

INCLINED POST

BASES

The inclination of the M-SAFE guardrail (Ref. MWOEL) is provided by the base, which is available in either a straight or a 25° inclined version.

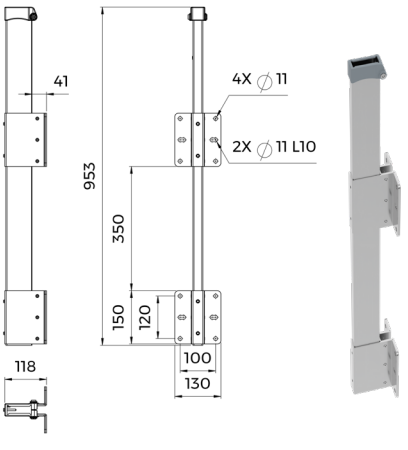

STRAIGHT BASE - REF. 36715

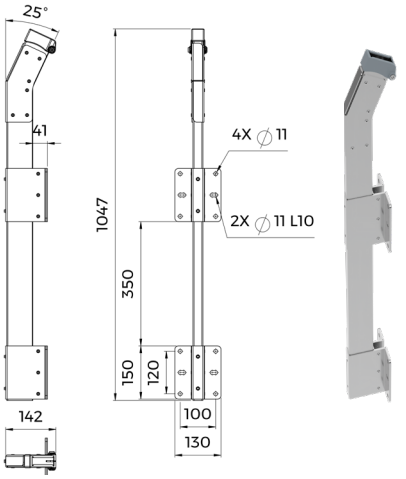

INCLINED BASE - REF. 36716

M-SAFE MID RAIL

In the M-SAFE technical guardrail (Ref. MWOEL), either a fixed through or adjustable intermediate tube can be used.

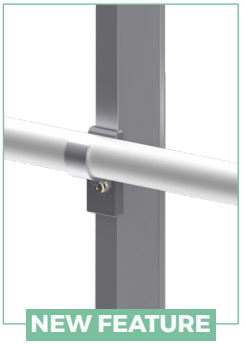

NEW FEATURE

M-SAFE GUARDRAIL EXTERNAL SURFACE MOUNT FIXATION ON AERATED CONCRETE
REF. MWOEL

ASSEMBLY PRINCIPLES

FIXING

- Maximum spacing between posts: 1.500 mm
- Use of Ø4,8 x 32 mm stainless steel self-drilling screws with H-head for:
  - Fixing the mid rail to the post
  - Fixing accessories (corners, plugs, wall mounts) to rails and mid rails
  - Fixing the narrowed ends of rails and mid rails

TOE BOARD OPTION

If the parapet height is less than 100 mm, using a toe board is mandatory.

WARNING: Before use, please refer to the corresponding instructions.

The toe board is made of aluminium and is 180 mm high.
- It is fixed to the post using a Ø4.8 x 32 mm stainless steel hex-head self-drilling screw.
- The toe board is secured to its profile with 2 headless M8x10 screws.

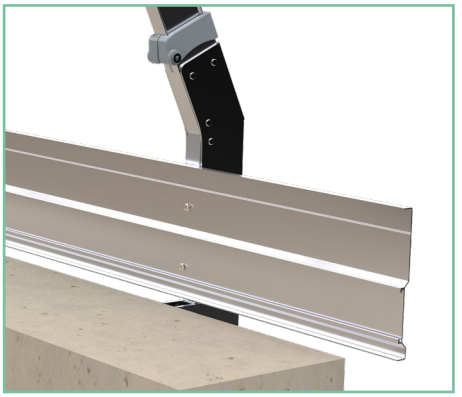

TECHNICAL SPECIFICATIONS

MWOEL							
Estimate weight per ml and per m²	Upright weight kg/ml			Inclined weight kg / ml			
	4.78			5.49			
DOWEL LOAD ACCORDING TO UPRIGHT HEIGHT							
Post height in mm	1,300	1,100	1,000	900	800	600	400
Load at the ELS on the ankle group in DaN	1,064	900	818	736	655	491	327
Estimated assembly time	100 m per day (2 people)						
Required screws	Mid rail + accessories: Ø4.8 x 32 mm stainless steel self-drilling screws (A2)						
	Post: M8 x 45 mm stainless steel Allen screws (A2)						
	Toe board: 1 x Ø4.8 x 32 mm stainless steel self-drilling screw (A2)						

Powder coating option for aluminiumparts available on request.

M-SAFE GUARDRAIL EXTERNAL SURFACE MOUNT FIXATION ON CLADDING
REF. MWOEM

STANDARDS 85-015: 2019 and EN ISO 14122-3: 2016

The M-SAFE guardrail with external surface mounting on cladding (Ref. MWOEM) is a fastening system designed for use on cladding when it is technically impossible to fix from inside the terrace. It is suitable for cladding with a minimum thickness of 0.63 mm; for thinner cladding, please consult us.
The assembly system is simple: rails and posts without screws secured by snap-on plugs; narrowed ends on rails and mid rails; pre-drilled posts.



Ref.	Post	Composition
MWOEM-S1	STRAIGHT	Top rail
MWOEM-S2		Top rail + mid rail
MWOEM-S3		Top rail + sub rail + toe board
MWOEM-I1	INCLINED	Top rail
MWOEM-I2		Top rail + mid rail
MWOEM-I3		Top rail + sub rail + toe board

M-SAFE GUARDRAIL EXTERNAL SURFACE MOUNT FIXATION ON CLADDING

REF. MWOEM

POST DIMENSIONS

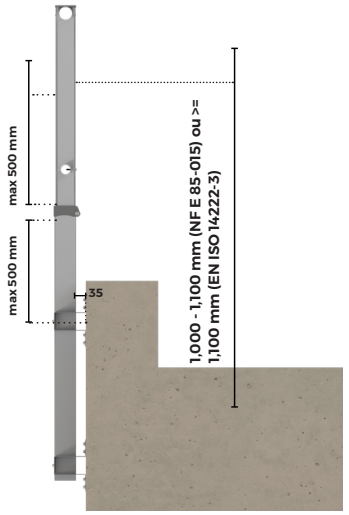

STRAIGHT POST

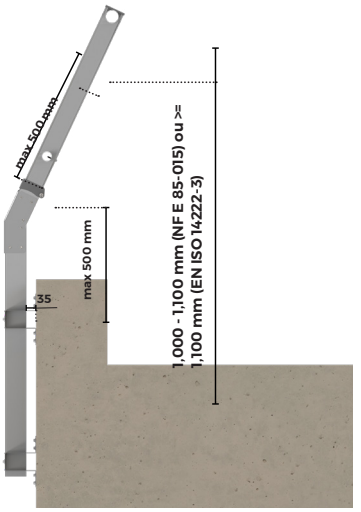

INCLINED POST

BASES

The inclination of the M-SAFE guardrail (Ref. MWOEM) is provided by the base, which is available in either a straight or 25° inclined version.

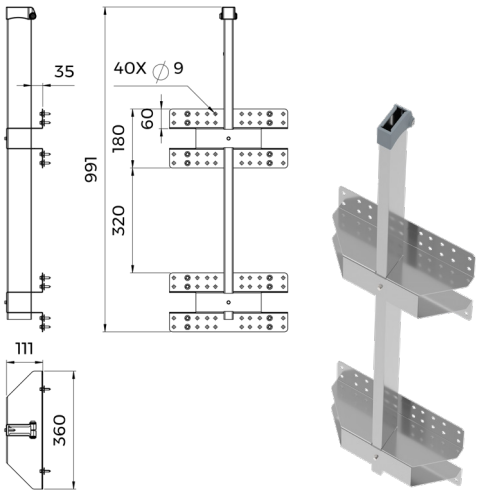

STRAIGHT BASE - REF. 36718

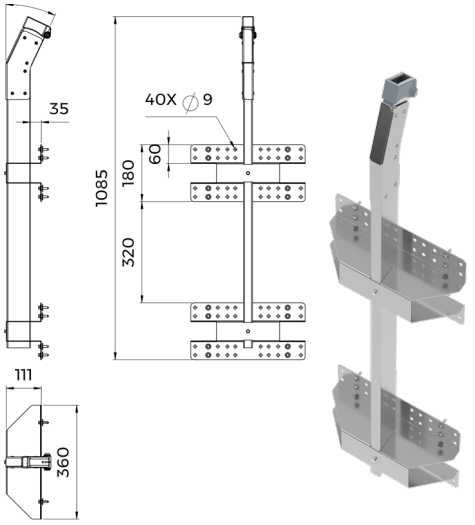

INCLINED BASE - REF. 36719

M-SAFE MID RAIL

In the M-SAFE technical guardrail (Ref. MWOEM), either a fixed-through or adjustable intermediate tube can be used.

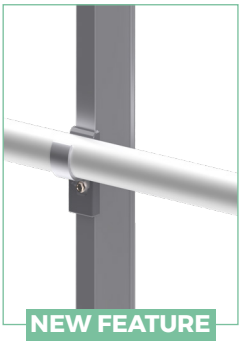

NEW FEATURE

M-SAFE GUARDRAIL EXTERNAL SURFACE MOUNT FIXATION ON CLADDING

REF. MWOEM

ASSEMBLY PRINCIPLES

FIXING

- Maximum spacing between posts: 1,500 mm
- Minimum cladding thickness: 0.63 mm
- Fixing of the base surface-mounted on cladding using 8 DBS2 screws + cup washers (16 per post)
- Use of the Ø4.8 x 32 mm stainless steel H head self-drilling screw:
  - Fixing the sub-rail to the upright
  - Attaching accessories (corners, caps, wall fixings) to rails and sub-rails
  - Fixing the constricted ends of rails and sub-rails

TOE BOARD OPTION

If the parapet height is less than 100 mm, the use of a toe board is mandatory.

WARNING: Before any use, please refer to the corresponding instructions.

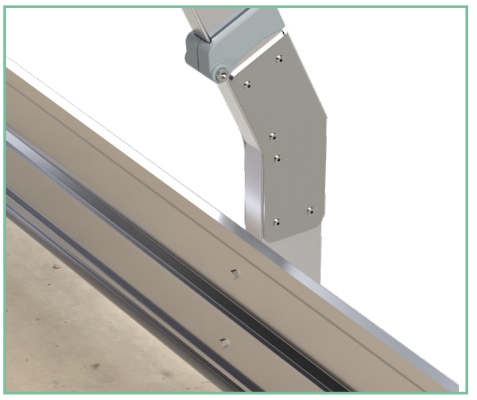

The toe board is made of aluminium and 180 mm high.

- It is fixed to the post using a Ø4.8 x 32 mm stainless steel hex-head self-drilling screw.
- Toe board joints and corners are secured using 2 headless M8x10 screws.

TECHNICAL SPECIFICATIONS

MWOEM							
Estimated weight	**Straight post kg/ml**			**Inclined post kg/ml**			
	1.77			1.82			
DOWEL LOAD ACCORDING TO UPRIGHT HEIGHT							
Height of upright in mm	1,300	1,100	1,000	900	800	600	400
Load in ELS for the taco group in DaN	1,064	900	818	736	655	491	327
Estimated assembly time	100 m per day (2 people)						
Required screws	Fixing to cladding (minimum thickness 0.63 mm): 16 DBS2 screws with cup washers (8 per base)						
	Mid rail + accessories: Ø4.8 x 32 mm stainless steel self-drilling screws						
	Post: M8 x 45 mm stainless steel Allen screws						
	Toe board: 1 Ø4.8 x 32 mm stainless steel self-drilling screw						

Powder coating option for aluminiumparts available on request.

Z BASE UNDER COPING MOUNT GUARDRAIL M-SAFE
REF. MZ

STANDARD EN ISO 14122-3: 2016

The M-SAFE guardrail fixed under coping with a Z base is designed to secure rooftops inaccessible to the public, equipped with either uninsulated parapets or those insulated up to 160 mm.
The bracket is fixed to the top of the parapet.
Simple assembly system: rails and posts without screws, secured with snap-on plugs; narrowed ends on rails and mid rails; pre-drilled posts.

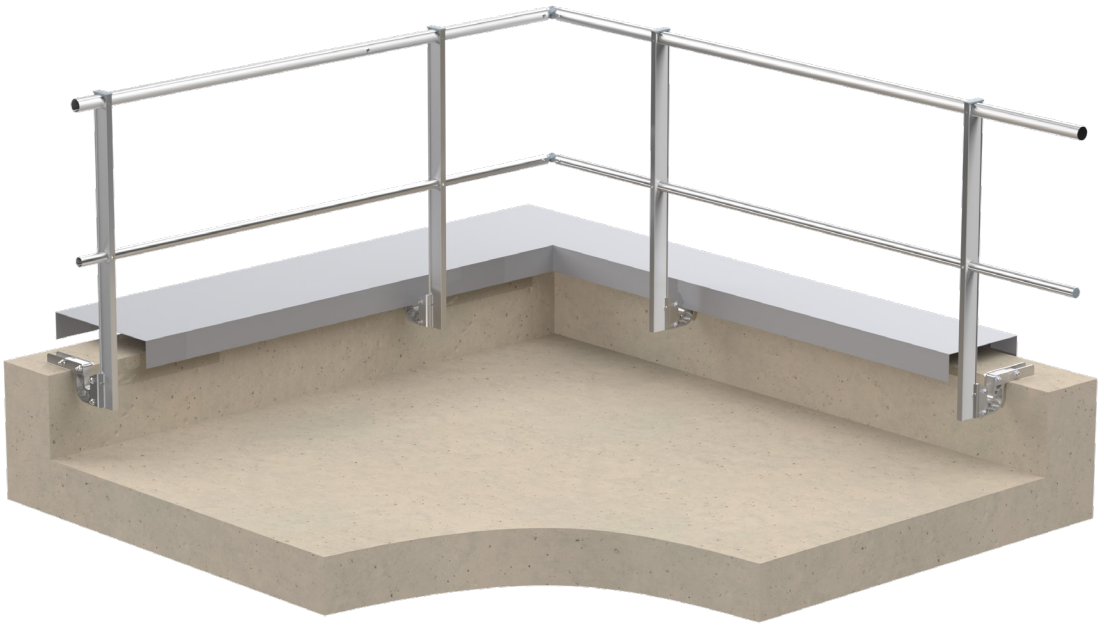

Ref.	Models	Base	Post	Composition
MZ	Eco Z0 Z100 Z160	S1	STRAIGHT	Top rail
		S2		Top rail + mid rail
		I1	INCLINED	Top rail
		I2		Top rail + mid rail
		F1	FOLDING	Top rail
		F2		Top rail + mid rail

Z BASE UNDER COPING MOUNT GUARDRAIL M-SAFE
REF. MZ

POST DIMENSIONS

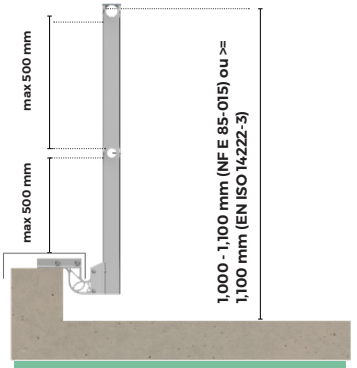

STRAIGHT POST

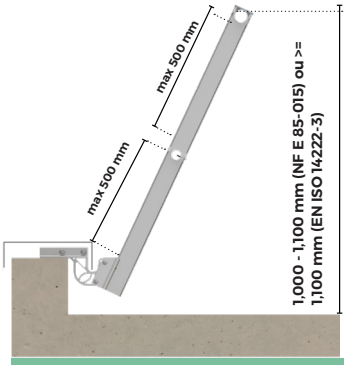

INCLINED POST

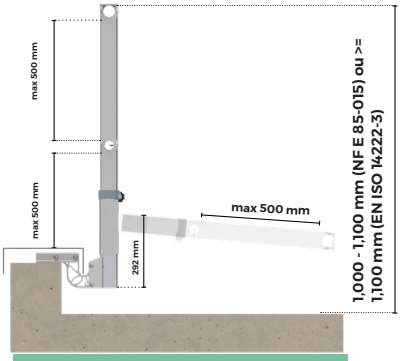

FOLDING POST

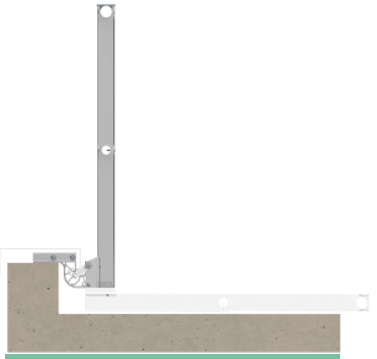

FOLDABLE BASE POST

BASES

BE base ECO: economic base, ideal for uninsulated parapets.
BE base0: equipped with a sliding system, suitable for insulated parapets up to 15 mm.
BE base100: equipped with a sliding system, suitable for insulated parapets up to 100 mm.
BE base160: equipped with a sliding system, suitable for insulated parapets up to 160 mm.

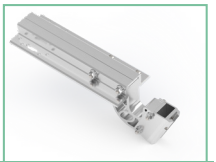

CLOSED SLIDING BLOCK

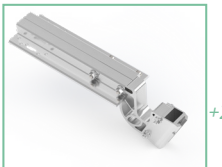

OPEN SLIDING BLOCK

+20 mm

***Sliding system available on BE base0. Z100. and Z160*



STRAIGHT BASE



INCLINED BASE



FOLDING BASE

M-SAFE MID RAIL

The M-SAFE technical guardrail (Ref. MZT) can be used with either a fixed-through or adjustable intermediate tube.



NEW FEATURE

Z BASE UNDER COPING MOUNT GUARDRAIL M-SAFE
REF. MZ
AVAILABLE CONFIGURATIONS

Z ECO BASE

Fixing into non-cracked concrete C20/C25 with 1 M10 stainless steel A2 anchor.



STRAIGHT - REF. 33541

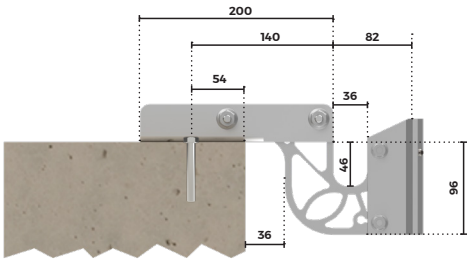

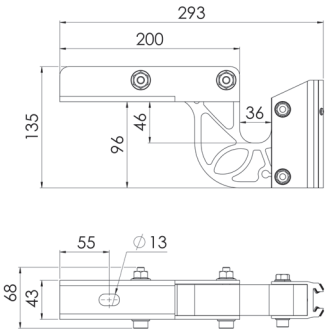

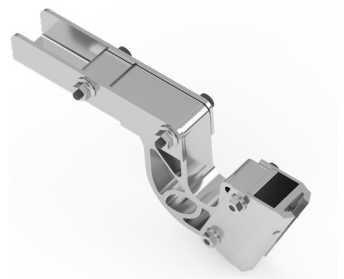

INCLINED - REF. 32956

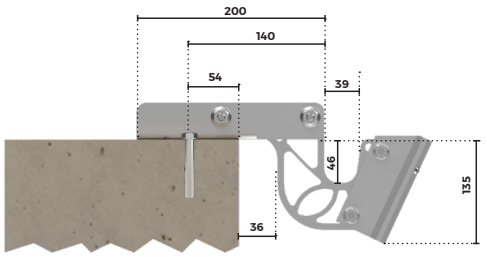

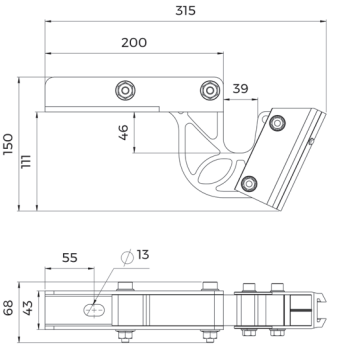

Z0 BASE

Fixing into non-cracked concrete C20/C25 with 2 M12 stainless steel A2 anchors.



STRAIGHT - REF. 33534

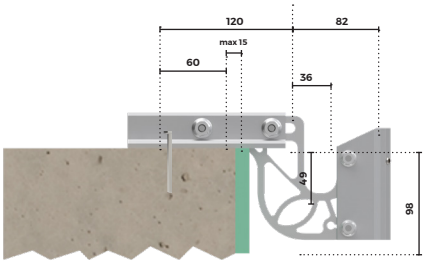

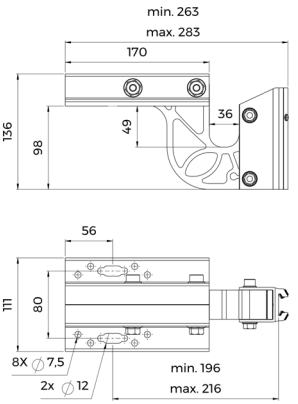



INCLINED - REF. 32957

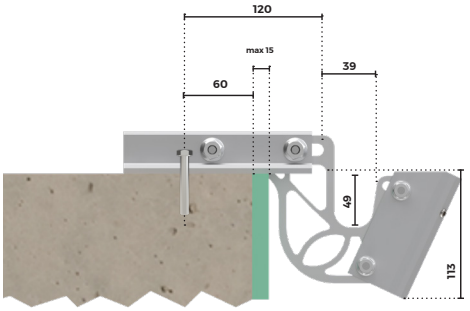

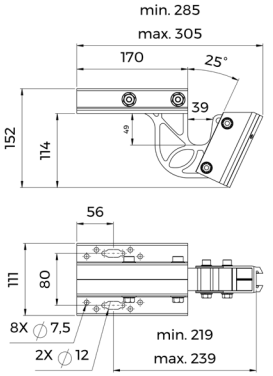

Z BASE UNDER COPING MOUNT GUARDRAIL M-SAFE
REF. MZ
AVAILABLE CONFIGURATIONS

Z100 BASE

Fixing into non-cracked concrete C20/C25 with 2 M10 stainless steel A2 anchor.

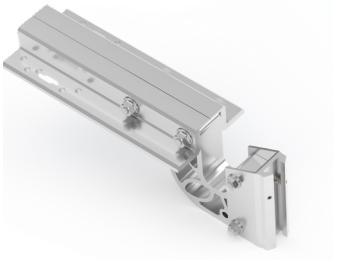

STRAIGHT - REF. 33539

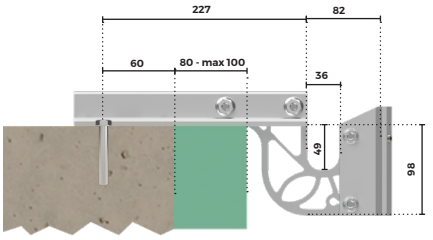

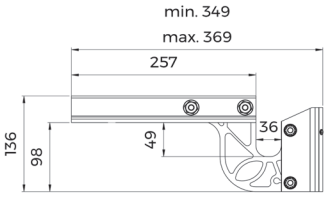

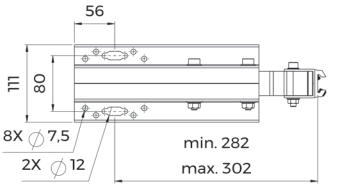



INCLINED - REF. 32958

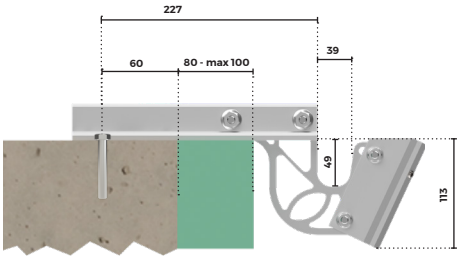

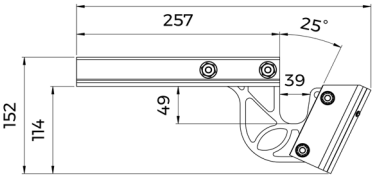

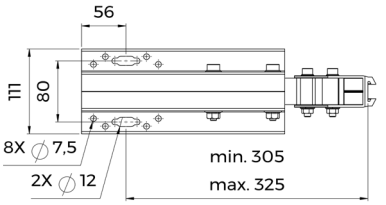

Z160 BASE

Fixing into non-cracked concrete C20/C25 with 2 M10 stainless steel A2 anchor.

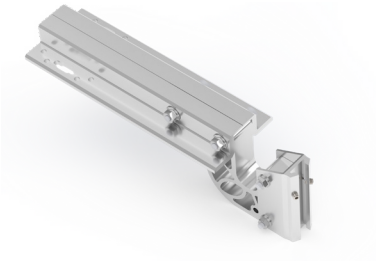

STRAIGHT - REF. 33540

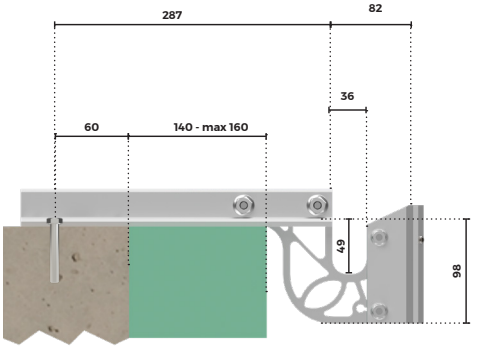

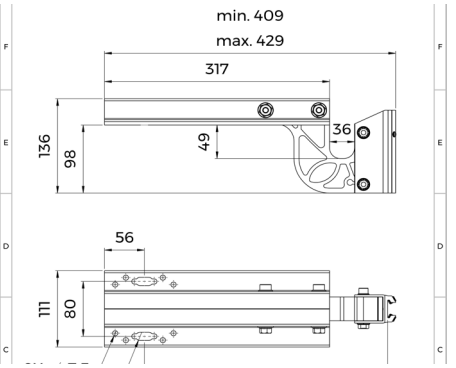

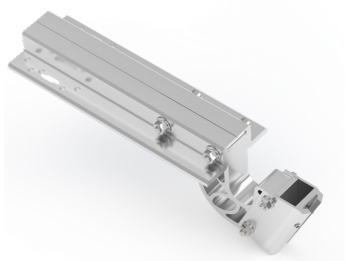

INCLINED - REF. 32959

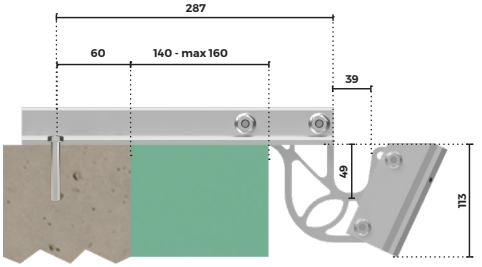

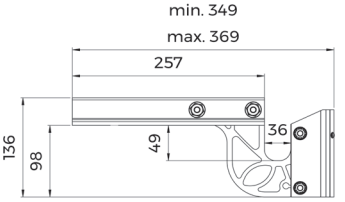

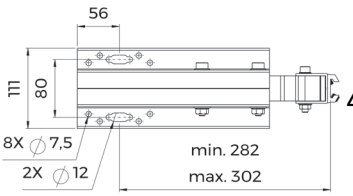

Z BASE UNDER COPING MOUNT GUARDRAIL M-SAFE

REF. MZ

ASSEMBLY PRINCIPLES

FIXING

- Fixing on metal parapet using 6 stainless steel self-drilling screws; prior consultation with the engineering office is required to determine the forces and feasibility depending on the support, as well as validation by the screw supplier.
- Maximum spacing between posts: 1,500 mm
- Minimum parapet height: 100 mm for the straight version, 140 mm for the inclined version.
- Use Ø4.8 x 32 mm stainless steel self-drilling screws with hex head for:
  - Fixing the mid rail to the post
  - Fixing accessories (corners, plugs, wall fixings) to rails and mid rails
  - Fixing narrowed ends of rails and mid rails

TECHNICAL SPECIFICATIONS

<table>
<tr><th colspan="9">MZ</th></tr>
<tr><th></th><th colspan="2">Z BASE ECO</th><th colspan="2">Z BASE0</th><th colspan="2">Z BASE 100</th><th colspan="2">Z BASE160</th></tr>
<tr><td rowspan="2">Estimated weight</td><td>Straight weight kg/ml</td><td>Inclined weight kg/ml</td><td>Straight weight kg/ml</td><td>Inclined weight kg/ml</td><td>Straight weight kg/ml</td><td>Inclined weight kg/ml</td><td>Straight weight kg/ml</td><td>Inclined weight kg/ml</td></tr>
<tr><td>2.42</td><td>2.47</td><td>2.42</td><td>2.47</td><td>2.54</td><td>2.59</td><td>2,66</td><td>2.71</td></tr>
<tr><td>Estimated assembly time</td><td colspan="2">120 m/day (2 people)</td><td colspan="2">100 m/day (2 people)</td><td colspan="2">100 m/day (2 people)</td><td colspan="2">100 m/day (2 people)</td></tr>
<tr><td rowspan="3">Required screws</td><td colspan="2">Fixing:
• On non-cracked concrete parapet C20/C25: 1 stainless steel M12 anchor per base (not included</td><td colspan="6">Fixing:
• On non-cracked concrete parapet C20/C25: 2 stainless steel M10 anchors per base (not included)
• On metal parapet: 6 stainless steel self-drilling screws
• On wood: Lag screws/wood screws, subject to consultation with the engineering office</td></tr>
<tr><td colspan="8">Mid rail + accessories:
Stainless steel self-drilling screws Ø4.8 x 32 mm</td></tr>
<tr><td colspan="8">2 stainless steel M8 x 10 set screws (mounted on the base)</td></tr>
</table>

The choice of anchors must consider the load table calculated above according to the height of the post.

	N° OF ANCHORS: 2; DIAMETER: M10; CENTER DISTANCE (mm): 80							
Load at SLS in DaN on the anchor group	Post dimensions/ BE base	1,300	1,100	1,100	900	800	600	400
	ZECO	1,170	990	900	810	720	540	360
	Z0	1,170	990	900	810	720	540	360
	Z100	1,170	990	900	810	720	540	360
	Z160	1,170	990	900	810	720	540	360

Powder coating option for aluminiumparts available on request.

WARNING: Z BASE ECO: 1 M12 anchor

Z BASE UNDER COPING TEMPORARY GUARDRAIL M-SAFE
REF. MZT

STANDARDS 85-015: 2019 and EN ISO 14122-3: 2016

The M-SAFE aluminium handrail, which is fixed under the canopy using a temporary Z base, allows a temporary handrail to be installed during construction work, without the need to change the base, but only the upright, saving both time and money.
The final handrail assembly system is simple and easy. The handrail does not need any screws, it is fixed with a plug, the handrails and intermediate railings have a reduction at the ends to join them in line and the uprights are pre-drilled (other displacement dimensions are available on request).

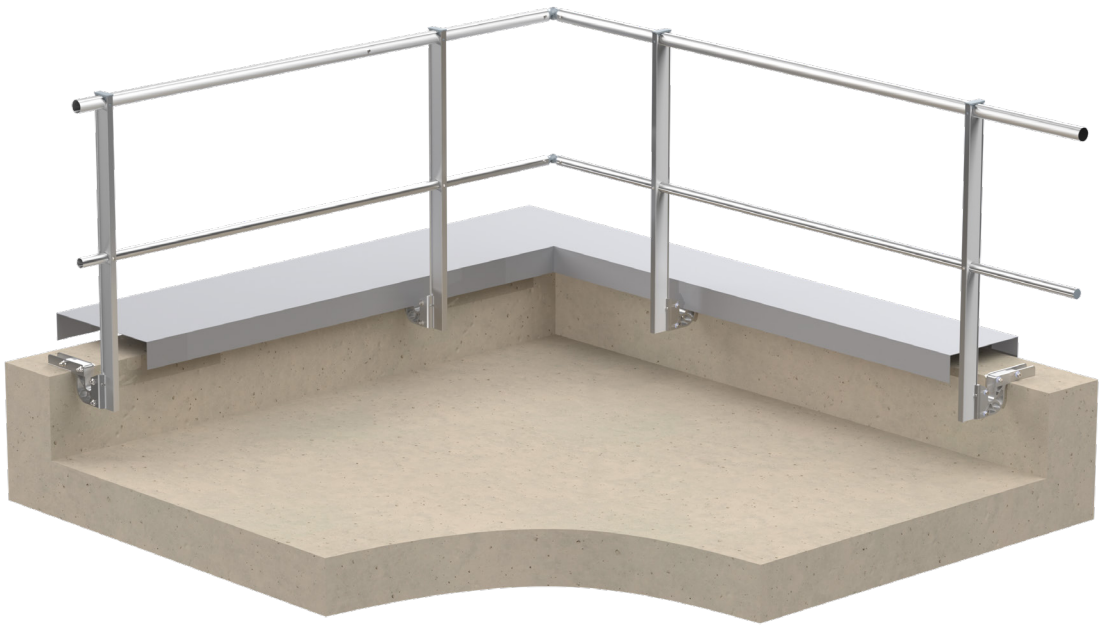

Ref.	Models	Base	Post	Composition
MZ	Eco Z0 Z100 Z160	**S1**	STRAIGHT	Top rail
		S2		Top rail + Mid rail

Z BASE UNDER COPING TEMPORARY GUARDRAIL M-SAFE

REF. MZT

POST DIMENSIONS

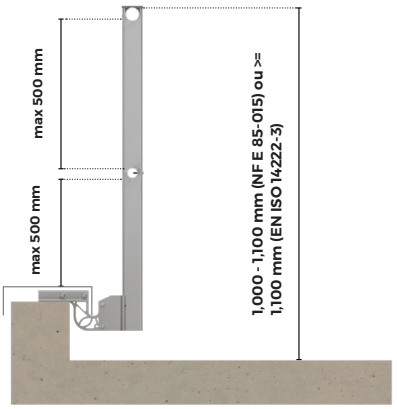

STRAIGHT POST

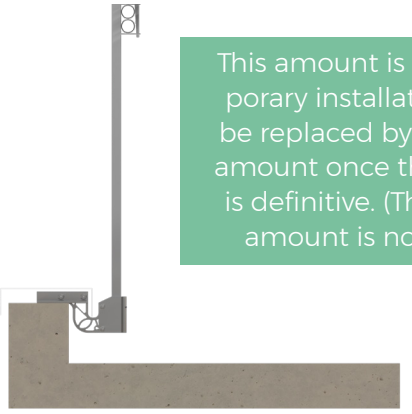

This amount is used for temporary installations and will be replaced by the standard amount once the installation is definitive. (The temporary amount is not supplied).

TEMPORARY POST

BASES

BE base ECO T: economic base, ideal for non-insulated parapets.
BE base0 T: equipped with a sliding system, suitable for insulated parapets up to 15 mm.
BE base100 T: equipped with a sliding system, suitable for insulated parapets up to 100 mm.
BE base160 T: equipped with a sliding system, suitable for insulated parapets up to 160 mm.

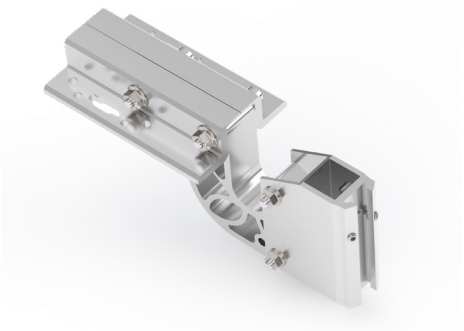

STRAIGHT BASE

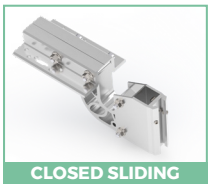

CLOSED SLIDING

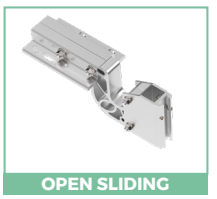

OPEN SLIDING

+20 mm

***Sliding system available on BE base0. Z100. and Z160.*

M-SAFE MID RAIL

The technical guardrail M-SAFE (Ref. MZT) can be used with either a fixed (through) or adjustable intermediate tube.

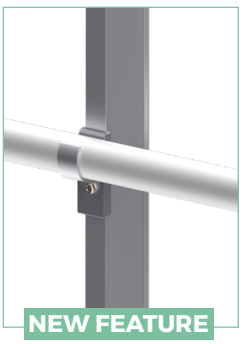

NEW FEATURE

Z BASE UNDER COPING TEMPORARY GUARDRAIL M-SAFE

REF. MZT
AVAILABLE CONFIGURATIONS

BASE Z ECO T STRAIGHT
REF. 35195

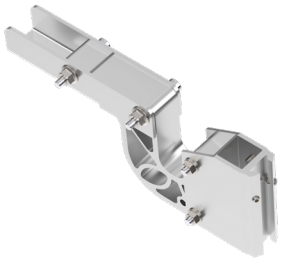

Fixing into non-cracked concrete C20/C25 with 1 stainless steel A2 M12 anchor.

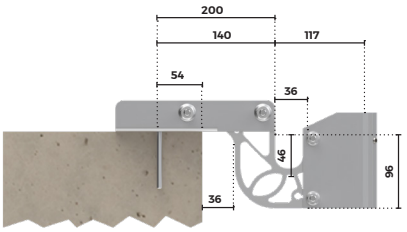

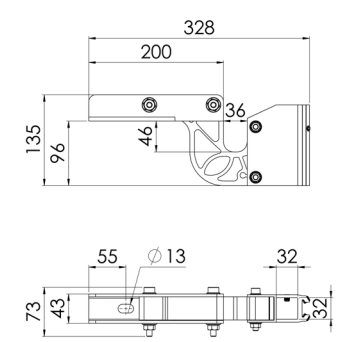

BASE Z0 T STRAIGHT
REF. 35191

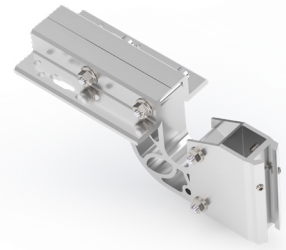

Fixing into non-cracked concrete C20/C25 with 2 stainless steel A2 M12 anchor.

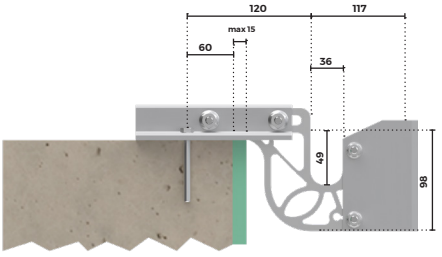

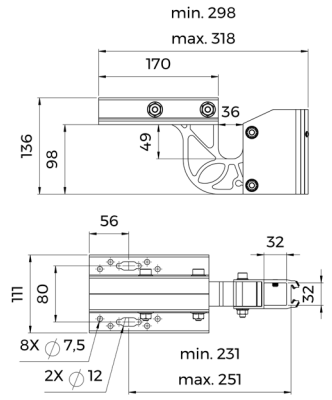

BASE Z100 T STRAIGHT
REF. 35193

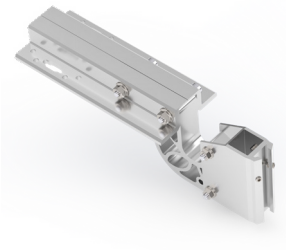

Fixing into non-cracked concrete C20/C25 with 2 stainless steel A2 M12 anchor.

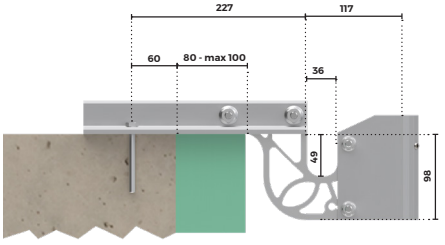

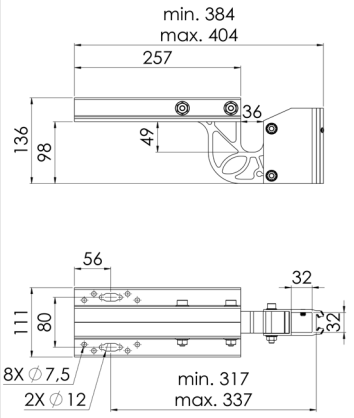

BASE Z160 T STRAIGHT
REF. 35194

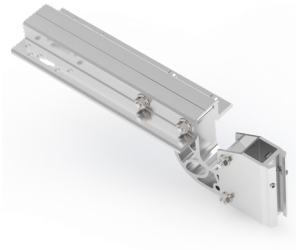

Fixing into non-cracked concrete C20/C25 with 2 stainless steel A2 M12 anchor.

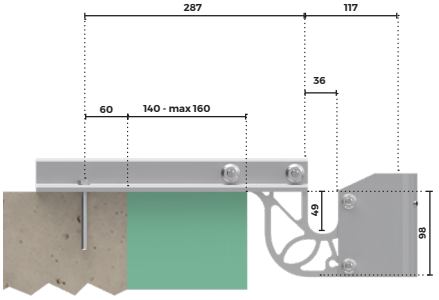

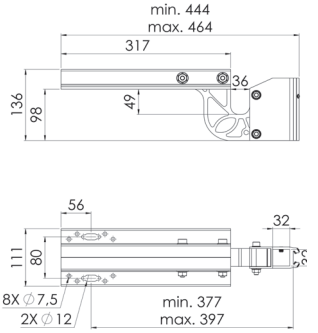

Z BASE UNDER COPING TEMPORARY GUARDRAIL M-SAFE REF. MZT

ASSEMBLY PRINCIPLES

FIXING

- Fixing on metal parapet using 6 stainless steel self-drilling screws; prior consultation with the engineering office is required to determine the forces and feasibility depending on the support, as well as validation by the screw supplier.
- Maximum spacing between posts: 1,500 mm.
- Minimum acroter height: 100 mm.
- Use Ø4.8 x 32 mm stainless steel self-drilling screws with hex head for:
  - Fixing the mid rail to the post.
  - Fixing accessories (corners, plugs, wall fixings) to rails and mid rails.
  - Fixing narrowed ends of rails and mid rails.

TECHNICAL SPECIFICATIONS

<table>
<tr><th colspan="9">MZT</th></tr>
<tr><td></td><td colspan="2">Z BASE ECO</td><td colspan="2">Z BASE0</td><td colspan="2">Z BASE 100</td><td colspan="2">Z BASE160</td></tr>
<tr><td rowspan="2">Estimated weight</td><td>Straight weight kg/ml</td><td>Inclined weight kg/ml</td><td>Straight weight kg/ml</td><td>Inclined weight kg/ml</td><td>Straight weight kg/ml</td><td>Inclined weight kg/ml</td><td>Straight weight</td><td>Inclined weight kg/ml</td></tr>
<tr><td>2.42</td><td>2.47</td><td>2.42</td><td>2.47</td><td>2.54</td><td>2.59</td><td>2.66</td><td>2.71</td></tr>
<tr><td colspan="9">DOWEL LOAD ACCORDING TO UPRIGHT HEIGHT</td></tr>
<tr><td>Post height in mm</td><td>1,300</td><td>1,100</td><td>1,000</td><td>900</td><td>800</td><td>600</td><td colspan="2">400</td></tr>
<tr><td>Load at the ELS on the ankle group in DaN</td><td>1,170</td><td>990</td><td>900</td><td>810</td><td>720</td><td>540</td><td colspan="2">360</td></tr>
<tr><td>Estimated assembly time</td><td colspan="2">120 m/day (2 people)</td><td colspan="2">100 m/day (2 people)</td><td colspan="2">100 m/day (2 people)</td><td colspan="2">100 m/day (2 people)</td></tr>
<tr><td rowspan="3">Required screws</td><td colspan="2">Fixing:
• On non-cracked concrete parapet C20/C25: 1 stainless steel M12 anchor per base (not included</td><td colspan="7">Fixing:
• On non-cracked concrete parapet C20/C25: 2 stainless steel M10 anchors per base (not included)
• On metal parapet: 6 stainless steel self-drilling screws
• On wood: Lag screws/wood screws, subject to consultation with the engineering office</td></tr>
<tr><td colspan="9">Mid rail + accessories: Stainless steel self-drilling screws Ø4.8 x 32 mm</td></tr>
<tr><td colspan="9">2 stainless steel M8 x 10 set screws (mounted on the base)</td></tr>
</table>

Powder coating option for aluminiumparts available on request.

M-SAFE GUARDRAIL FIXING ON STEEL DECK
REF. MM

STANDARDS 85-015: 2019 and EN ISO 14122-3: 2016

The M-SAFE aluminium guardrail system for fixing on steel decking ensures the safety of steel deck or sandwich panel roofs that are not accessible to the public.
It is installed directly onto decking with a minimum thickness of 0.4 mm, eliminating the need for any waterproofing work. It fits corrugations ranging from 100 to 500 mm in any direction from the base.
The assembly system is simple: rails and posts without screws, with snap-on caps; the ends of the rails and intermediate rails are tapered, and the posts come pre-drilled.

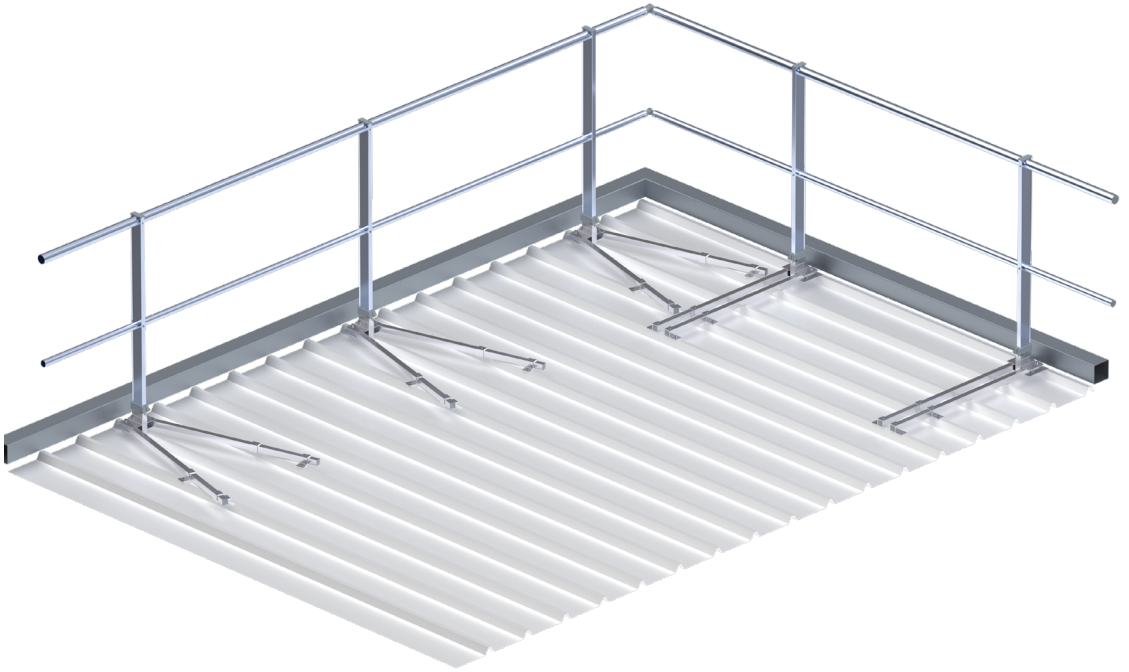

Ref.	Post	Composition
MM-S2	STRAIGHT	Top rail + mid rail
MM-S3		Top rail + sub rail + toe board
MM-I2	INCLINED	Top rail + mid rail
MM-I3		Top rail + sub rail + toe board
MM-F2	FOLDING	Top rail + mid rail
MM-F3		Top rail + sub rail + toe board

M-SAFE GUARDRAIL FIXING ON STEEL DECK
REF. MM

POST DIMENSIONS

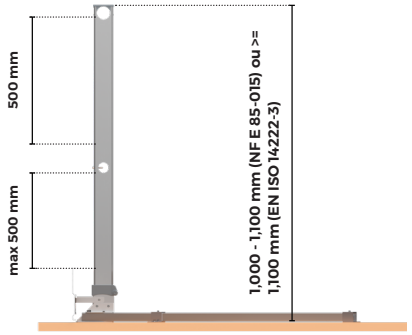

STRAIGHT POST

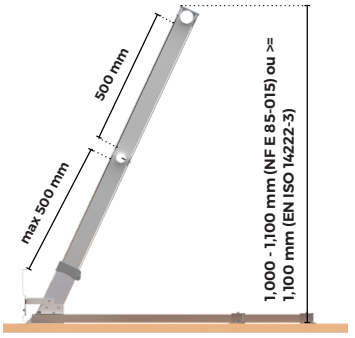

INCLINED POST

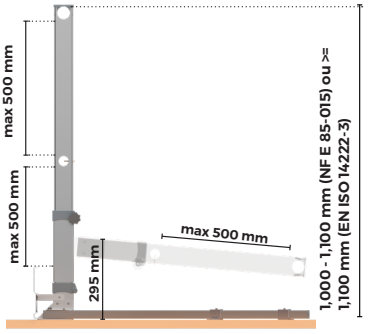

FOLDING POST

BASES

The inclination of the M-SAFE guardrail (Ref. MM) is provided by the base, which is available in either a straight or a 25° inclined version.

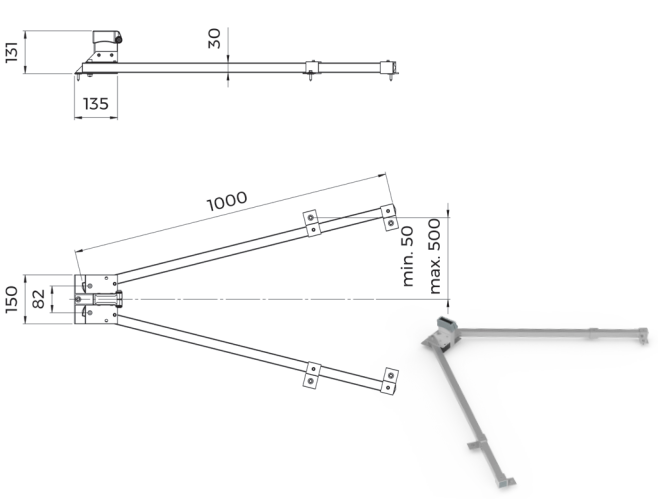

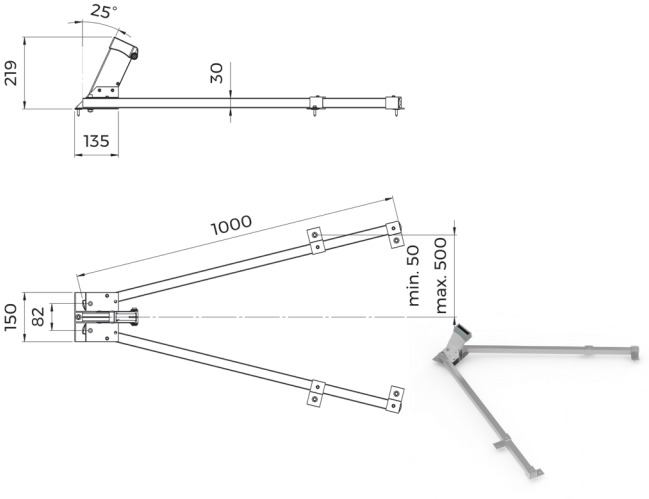

Opening possible up to 1,000 mm or full closure.

STRAIGHT BASE - REF. 32931

INCLINED BASE - REF. 32932

M-SAFE MID RAIL

In the M-SAFE technical guardrail (Ref. MM), either a fized-through or adjustable intermediate tube can be used.

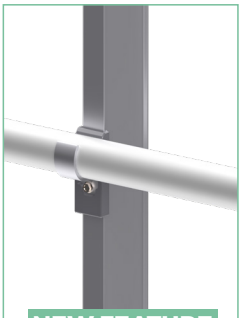

NEW FEATURE

M-SAFE GUARDRAIL FIXING ON STEEL DECK
REF. MM
ASSEMBLY PRINCIPLES

FIXING

- Fixing to steel decking: 5 DBS2 screws with sealing washers + 5 chimney washers per base (supplied with the base).
- The DBS2 6 x 25 mm screw displaces material inward, forming a bead that increases embedment depth and ensures watertightness.
- It has a high stripping torque, even in thin materials (< 5 N·m compared to an average of 1.5 N·m for standard self-drilling screws).
- Maximum spacing between posts: 1,500 mm.
- Use of Ø4,8 x 32 mm stainless steel self-drilling screws with H-head for:
  - Fixing the mid rail to the post.
  - Fixing accessories (corners, plugs, wall mounts) to rails and mid rails.
  - Fixing the narrowed ends of rails and mid rails.

TOE BOARD OPTION

If the parapet height is less than 100 mm, the use of a toe board is mandatory.

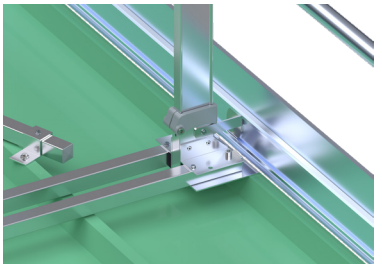

WARNING: Before any use, please refer to the corresponding instructions.

The toe board is made of aluminium and 180 mm high.
- It is fixed to the post using a Ø4.8 x 32 mm stainless steel hex-head self-drilling screw.
- Toe board joints and corners are secured using 2 headless M8x10 screws.

TECHNICAL SPECIFICATIONS

MM				
Estimated weight	Weight STRAIGHT kg/ml	Weight INCLINED kg/ml	Weight STRAIGHT kg/ m²	Weight INCLINED kg/ m²
	3,35	3,40	3,35	3,40
Estimated assembly time	100 m per day (2 people)			
Required screws	Fixing to steel decking / sandwich panel (minimum thickness 0.4 mm): 5 DBS2 screws + chimney washers			
	Mid rail + accessories: Stainless steel self-drilling screws Ø4.8 x 32 mm			
	Post: Stainless steel ALLEN screw M8 x 45			
	Toe board: 1 stainless steel self-drilling screw Ø4.8 x 32 mm			

Powder coating option for aluminiumparts available on request.

GUARDRAIL FOR WATERPROOFED SLAB (D BASE) M-SAFE REF. MD

STANDARDS 85-015: 2019 and EN ISO 14122-3: 2016

The M-SAFE aluminium guardrail for fixing to a waterproofed slab is fixed into the slab through the waterproofing complex using its D base. The base is available in three standard heights (300, 400 and 500 mm) and complies with DTU 43.1.
Simple assembly systems: screwless rail/upright with clip-on cap, swaged ends of rails and sub-rails, pre-drilled upright.

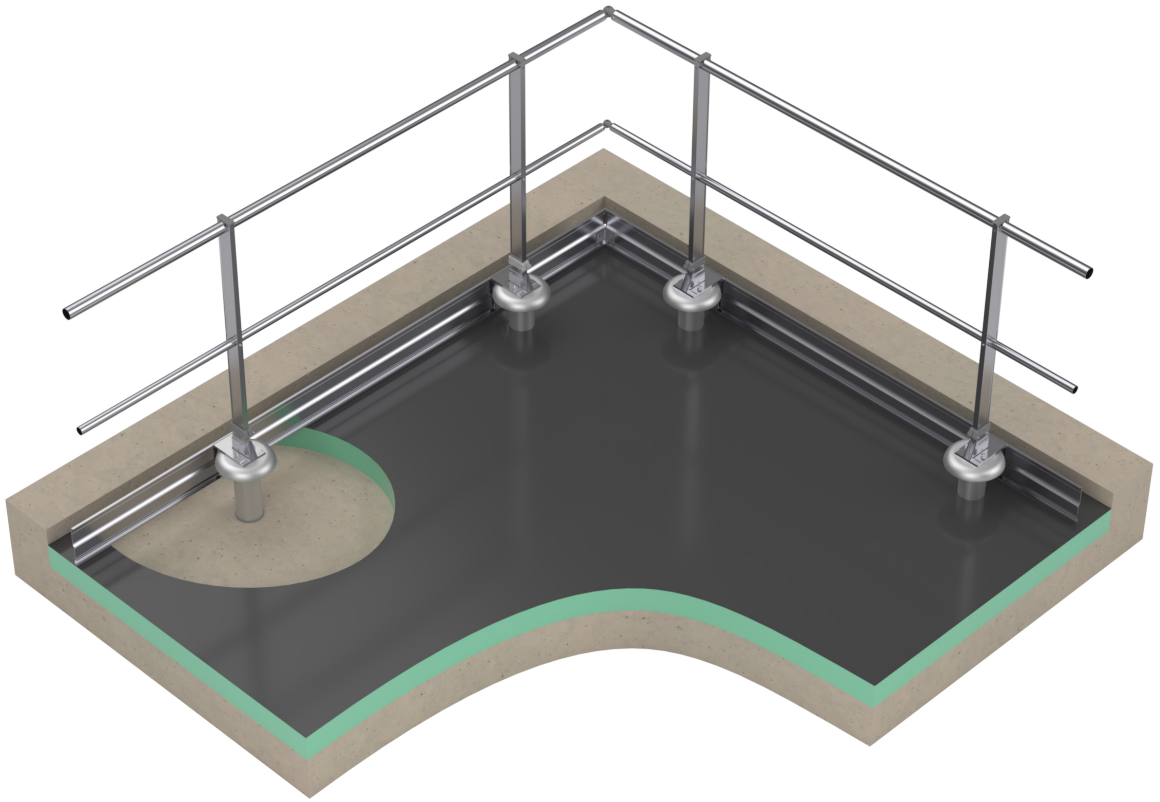

Ref.	Models	Base	Post	Composition
MD	300 mm 400 mm 500 mm	S1	STRAIGHT	Top rail
		S2		Top rail + mid rail
		S3		Top rail + sub rail + toe board
		I1	INCLINED	Top rail
		I2		Top rail + mid rail
		I3		Top rail + sub rail + toe board
		F1	FOLDING	Top rail
		F2		Top rail + mid rail
		F3		Top rail + sub rail + toe board

GUARDRAIL FOR WATERPROOFED SLAB (D BASE) M-SAFE REF. MD

POST DIMENSIONS

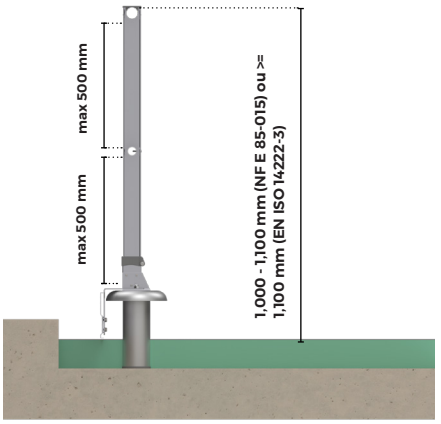

STRAIGHT POST

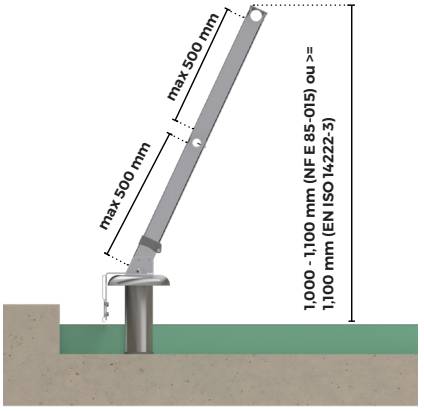

INCLINED POST

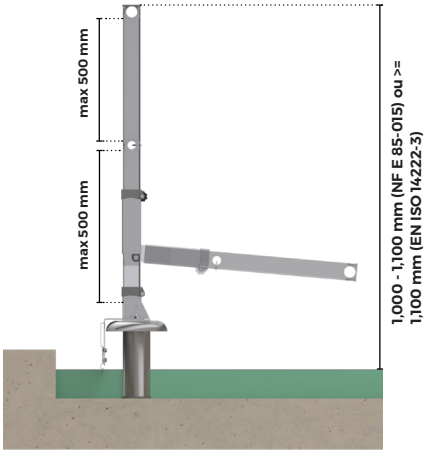

FOLDING POST

BASES

The inclination of the M-SAFE guardrail (Ref. MD) is achieved using a base available in straight or 25° inclined versions.

Three standard post heights are available:

- Height 300 mm: for insulation up to 135 mm
- Height 400 mm: for insulation up to 235 mm
- Height 500 mm: for insulation up to 335 mm



STRAIGHT BASE



INCLINED BASE

M-SAFE MID RAIL

In the M-SAFE technical guardrail system (Ref. MD), either a through or adjustable intermediate rail can be used.

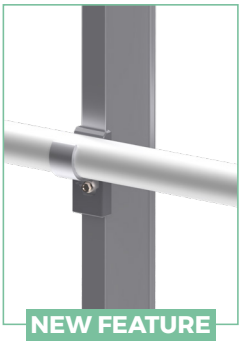

NEW FEATURE

GUARDRAIL FOR WATERPROOFED SLAB (D BASE) M-SAFE REF. MD

AVAILABLE CONFIGURATIONS

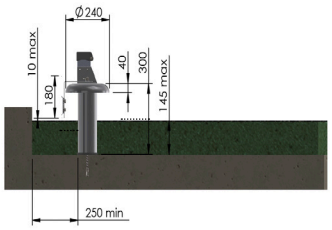

STRAIGHT BASE 300 MM- REF 37418

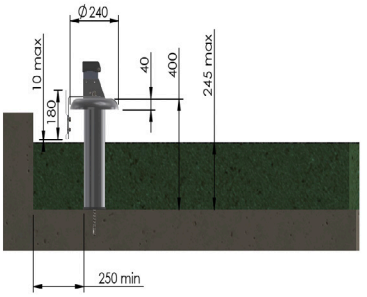

STRAIGHT BASE 400 MM- REF 37421

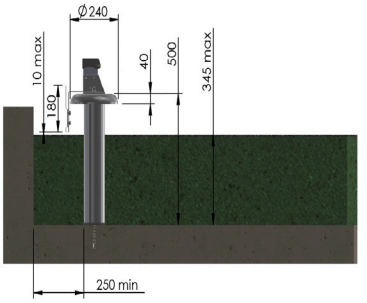

STRAIGHT BASE 500 MM- REF 37423

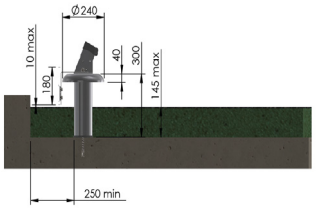

INCLINED BASE 300 MM- REF 37419

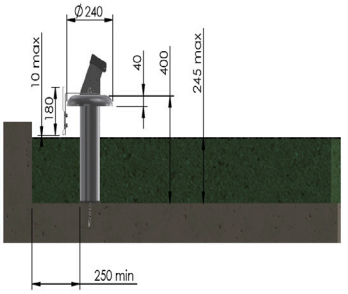

INCLINED BASE 400 MM- REF 37420

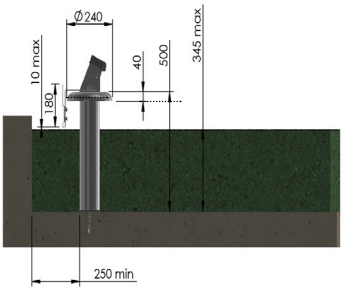

INCLINED BASE 500 MM- REF 37422

GUARDRAIL FOR WATERPROOFED SLAB (D BASE) M-SAFE REF. MD

ASSEMBLY PRINCIPLES

FIXING

- Maximum spacing between posts: 1,500 mm
- Minimum distance of 250 mm from the edge of the parapet
- Adjustable angle for the top rail and intermediate rail, with rails and intermediate rails tubes having reduced ends that fit into each other
- Fixing of the base plate to the post: stainless steel CHC screw M8 x 45 mm, pre-assembled in the factory
- Fixing the bases in uncracked C20/C25 concrete via 2 M10 stainless steel dowels (not supplied, refer to the loads according to the assembly instructions)
- Use of the Ø4.8 x 32 mm stainless steel H head self-drilling screw:
  - Fixing the sub-rail to the upright
  - Attaching accessories (corners, caps, wall fixings) to rails and sub-rails
  - Fixing the constricted ends of rails and sub-rails

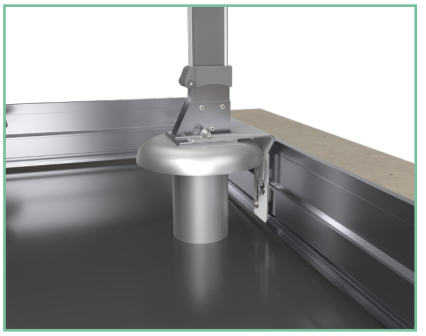

TOE BOARD OPTION

If the height of the parapet is less than 100 mm, the use of a toe board is mandatory.

WARNING: Before any use, please refer to the corresponding instructions.

The toe board is made of aluminum, 180 mm high.

- The toe board joint bracket for BE base/BE is fixed to the base.
- The toe board joint bracket for BE base/BE is fixed to the toe board using two M8 x 15 mm inserts (provided).

CARACTERISTIQUES TECNIQUES

MD			
Estimated weight	Dimensions (mm)	Dimensions (kg/m²)	Inclined weight (kg/ml)
	300	2.66	2.71
	400	2.85	2.90
	500	3,04	3,09
Estimated assembly time	60 m per day (2 people)		
Required screws	Fixing on non-cracked concrete C20/C25: 2 stainless steel M10 anchors per base (not included)		
	Intermediate rail + accessories: stainless steel self-drilling screws Ø4.8 x 32 mm		
	Post: stainless steel Allen screw M8 x 45		
	Toe board: 1 stainless steel self-drilling screw Ø4.8 x 32 mm		

The choice of anchors must consider the force table calculated above according to the height of the post.

Load at SLS in DaN on the anchor group	N° OF ANCHORS: 2; DIAMETER: M10; CENTER DISTANCE (mm): 80							
	Post dimensions/ BE base	1,300	1,100	1,100	900	800	600	400
	300	1,305	990	900	810	720	540	360
	400	1,395	1,215	1,125	1,035	945	765	585
	500	1,485	1,305	1,215	1,125	1,035	855	675

GUARDRAIL FOR WATERPROOFED STEEL DECK (BE BASE) M-SAFE

REF. MMW

STANDARDS 85-015: 2019 and EN ISO 14122-3: 2016

The M-SAFE aluminium guardrail with waterproof deck fixing is installed on the deck through the waterproofing system using its BE bracket. The bracket is available at three standard heights (300. 400. and 500 mm) and comply with DTU 43.3.
Simple assembly system: rail/post without screws with snap-on caps, ends of rails and sub-rails tapered, and pre-drilled posts.

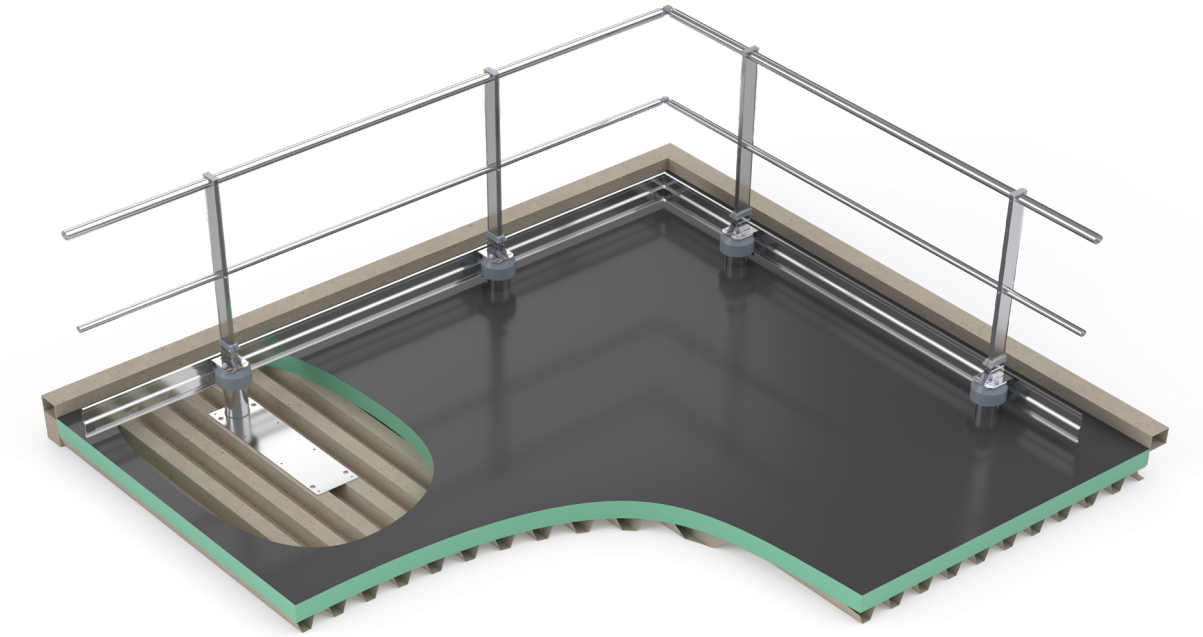

Ref.	Models	Base	Post	Composition
MMW	300 mm 400 mm 500 mm	S1	STRAIGHT	Top rail
		S2		Top rail + mid rail
		S3		Top rail + sub rail + toe board
		I1	INCLINED	Top rail
		I2		Top rail + mid rail
		I3		Top rail + sub rail + toe board
		F1	FOLDING	Top rail
		F2		Top rail + mid rail
		F3		Top rail + sub rail + toe board

GUARDRAIL FOR WATERPROOFED STEEL DECK (BE BASE) M-SAFE REF. MMW

POST DIMENSIONS

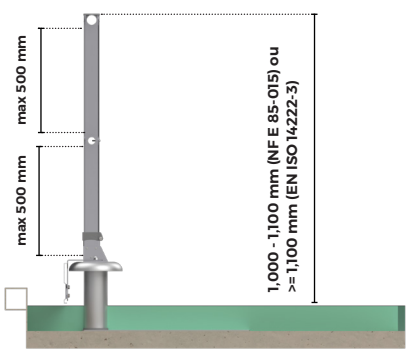

STRAIGHT POST

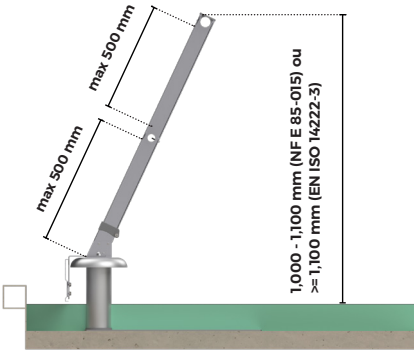

MONTANT INCLINÉ

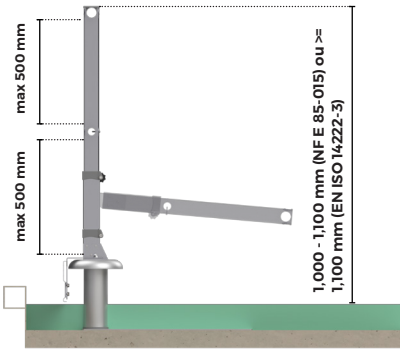

MONTANT RABATTABLE

BASES

The inclination of the M-SAFE guardrail (Ref. MMW) is achieved by using the base, which is available in either a straight version or with a 25° incline.

Three standard heights:

- 300 mm height for insulation up to 135 mm thick
- 400 mm height for insulation up to 235 mm thick
- 500 mm height for insulation up to 335 mm thick

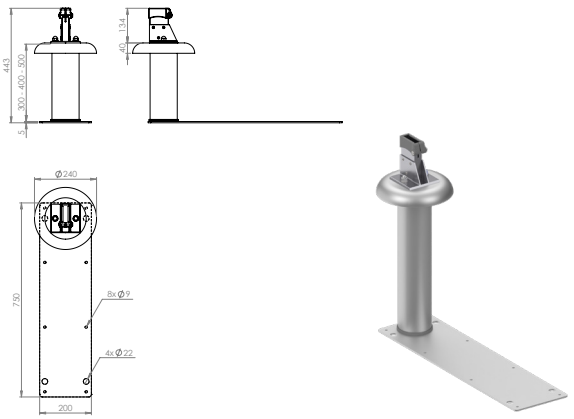

STRAIGHT BASE - REF. 35148

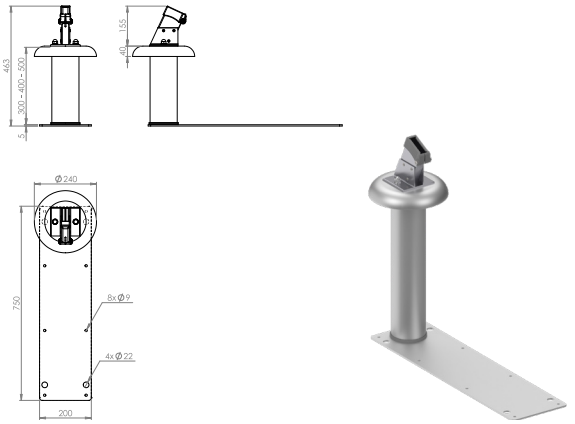

INCLINED BASE - REF. 35156

M-SAFE MID RAIL

The M-SAFE surface-mounted guardrail (Ref. MMW) is available with two sub-rail versions: through-mounted or adjustable.

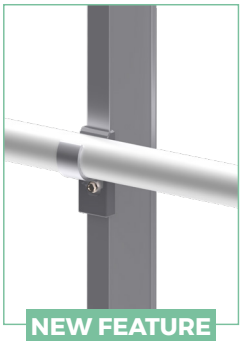

NEW FEATURE

GUARDRAIL FOR WATERPROOFED STEEL DECK (BE BASE) M-SAFE REF. MMW

AVAILABLE CONFIGURATIONS

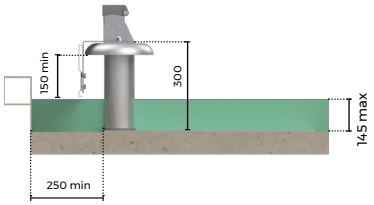

STRAIGHT BASE 300 MM

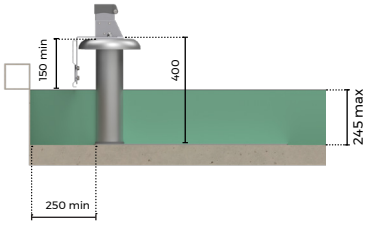

STRAIGHT BASE 400 MM

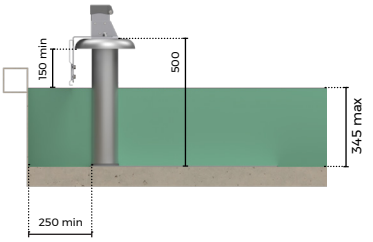

STRAIGHT BASE 500 MM

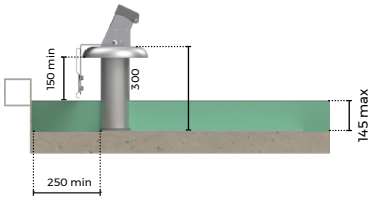

INCLINED BASE 300 MM

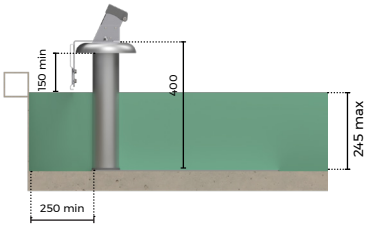

INCLINED BASE 400 MM

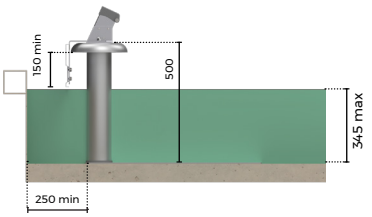

INCLINED BASE 500 MM

GUARDRAIL FOR WATERPROOFED STEEL DECK (BE BASE) M-SAFE REF. MMW

ASSEMBLY PRINCIPLES

FIXING

- Fixing to the deck is done with 8 DBS2 screws, waterproof washers, and 8 chimney washers per base
- The DBS2 screw (6 x 25 mm) displaces the material inward, forming a bead, which increases the embedment length and guarantees water tightness.
- Minimum deck thickness: 0.63 mm.
- The stripping torque is high even in thin materials (< 5 N·m compared to an average of 1.5 N·m for standard self-drilling screws).
- Maximum spacing between uprights: 1,500 mm.
- Use Ø4.8 x 32 mm stainless steel self-drilling screws with hex head for:
  - Fixing the mid rail to the post.
  - Fixing accessories (corners, plugs, wall fixings) to rails and mid rails
  - Fixing narrowed ends of rails and mid rails.

TOE BOARD OPTION

If the height of the parapet is less than 100 mm, the use of a toe board is mandatory.

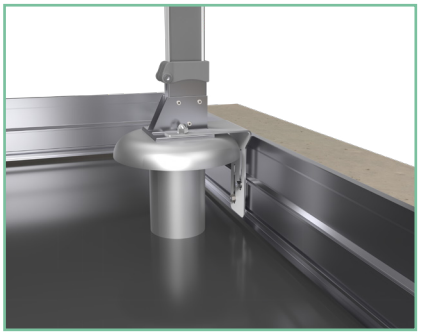

WARNING: Before any use, please refer to the corresponding instructions.

- The toe board is made of aluminum, 180 mm high.
- The toe board junction bracket for D/BE sabots is fixed to the base.
- The toe board junction bracket for D/BE sabots is fixed to the toe board using two M8 x 15 mm inserts (provided).

TECHNICAL SPECIFICATIONS

MMW					
	Dimensions	Straight weight kg/m	Inclined weight kg/m	Straight weight kg/m²	Inclined weight kg/m²
Estimated weight	300	6.33	6.38	8.43	8.50
	400	6.53	6.58	8.70	8.77
	500	6.65	6.70	8.87	8.94
Estimated assembly time	60 m per day (2 people)				
Required screws	Fixing on sheet metal minimum thickness 0.63 mm: 8 DBS2 screws + sealing washer (not included)				
	Intermediate parts + accessories: self-drilling screws Ø4.8 x 32 mm stainless steel A2				
	Upright: Allen screws M8 x 45 mm				
	Toe board: 2 studs M8 x 15 mm				

Powder coating option for aluminiumparts available on request.

M-SAFE FREESTANDING GUARDRAIL
REF. MF

STANDARDS 85-015: 2019 and EN ISO 14122-3: 2016

The M-SAFE freestanding aluminium guardrail (Ref. MF) is the fall protection solution for rooftops inaccessible to the public when fixing points are impossible to install. It allows for any drilling intervention. Simple assembly systems: handrail/post without screws with clip-on caps, tapered ends on rails and sub-rails, pre-drilled posts.

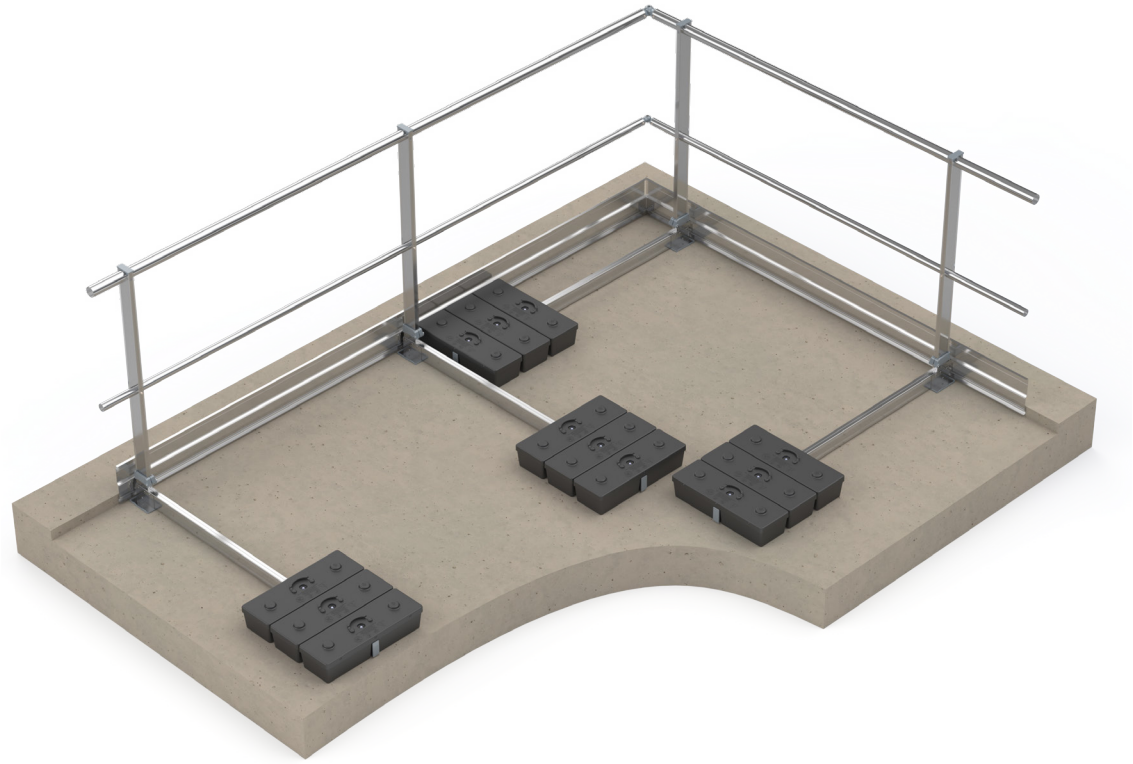

Ref.	Post	Composition
MF-S2	STRAIGHT	Top rail + mid rail
MF-S3		Top rail + sub rail + toe board
MF-I2	INCLINED	Top rail + mid rail
MF-I3		Top rail + sub rail + toe board
MF-F2	FOLDING	Top rail + mid rail
MF-F3		Top rail + sub rail + toe board

M-SAFE FREESTANDING GUARDRAIL
REF. MF

POST DIMENSIONS

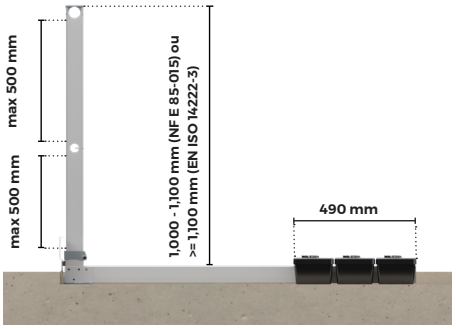

STRAIGHT POST

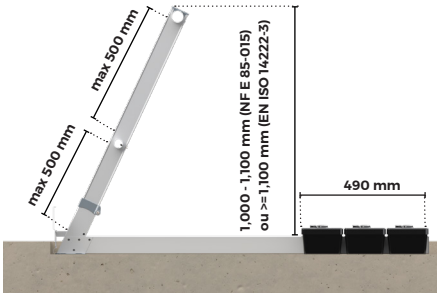

INCLINED POST

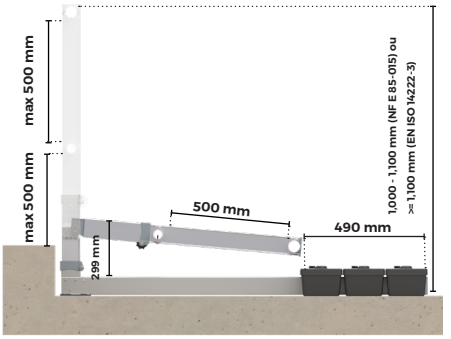

FOLDING POST

BASES

The inclination of the M-SAFE guardrail (Ref. MF) is provided by the base, which is available in either a straight or a 25° inclined version.

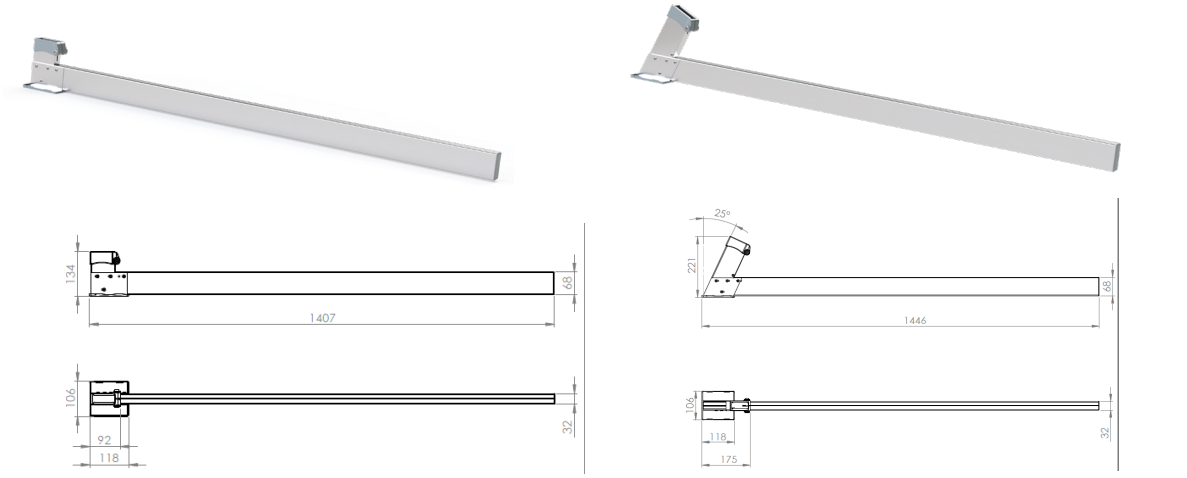

STRAIGHT BASE - REF. 32918

INCLINED BASE - REF. 32917

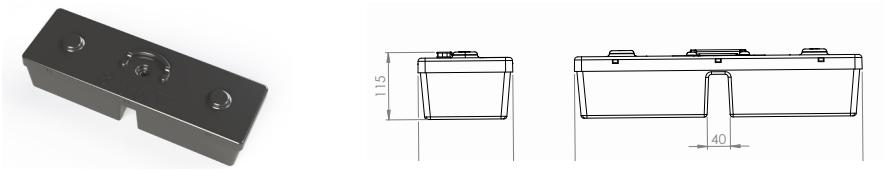

M-SAFE MID RAIL

In the M-SAFE technical guardrail (Ref. MF), either a fized-through or adjustable intermediate tube can be used.

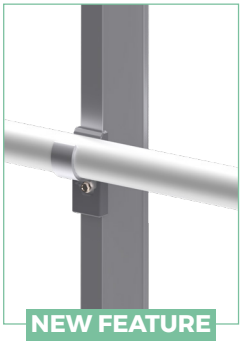

NEW FEATURE

M-SAFE FREESTANDING GUARDRAIL
REF. MF

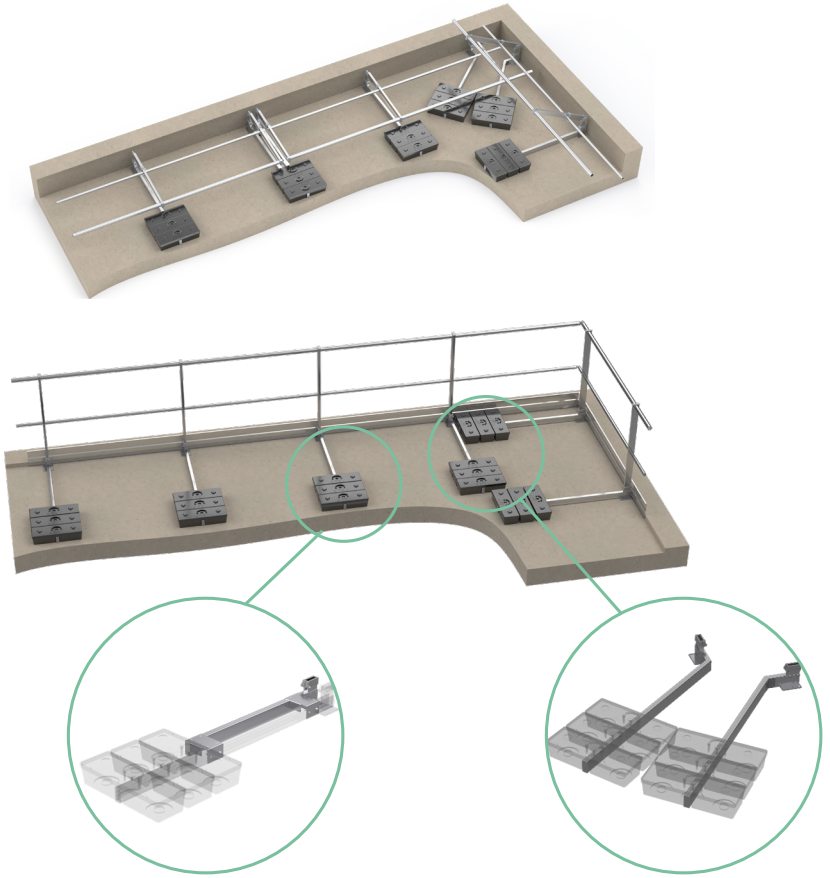

Brace strut for frame connection – the kit is composed of:

- One 900 mm long brace strut
- 2 connection plates + 16 stainless steel self-drilling screws Ø4.8 x 32 mm

Bent brace strut: to avoid overlapping of the bases at the corners, we offer bent brace struts (right and left)

Foldable frame up to a maximum of 12 meters.

M-SAFE FREESTANDING GUARDRAIL
REF. MF

ASSEMBLY PRINCIPLES

FIXING

- The self-supporting base is placed on the roof waterproofing, thus avoiding any drilling into the waterproofing and the risk of leaks.
- The presence of a minimum 20 mm high stop at the roof edge (such as a parapet) is mandatory for the self-supporting guardrail to prevent the risk of tipping over.
- Use of Ø4.8 x 32 mm stainless steel H-head self-drilling screws for:
  - Fixing the under-rail to the post
  - Fixing accessories (angles, caps, wall mounts) to the rails and under-rails.
- Use of Ø4.8 x 50 mm stainless steel H-head self-drilling screws to fix the concrete pads (1 screw per pad).
- Fixing the base to the post: stainless steel CHC M8 x 45 mm screws, factory-mounted.

TOE BOARD OPTION

If the height of the parapet is less than 100 mm, the use of a toe board is mandatory.

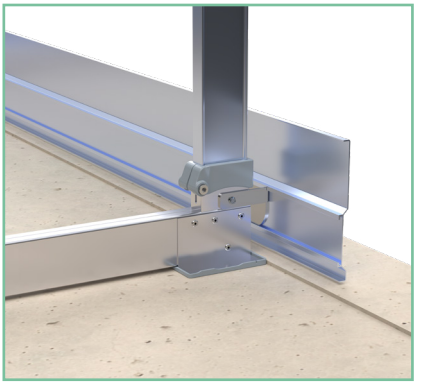

WARNING: Before any use, please refer to the corresponding instructions.

The toe board is made of aluminium and 180 mm high.

- It is fixed to the post using a Ø4.8 x 32 mm stainless steel hex-head self-drilling screw.
- Toe board joints and corners are secured using 2 headless M8x10 screws.

TECHNICAL SPECIFICATIONS

MF				
Estimated weight	Weight STRAIGHT kg/ml	Weight INCLINED kg/ml	Weight STRAIGHT kg/ m²	Weight INCLINED kg/ m²
	19.03	19.08	13.17	13.20
Estimated assembly time	150 m per day (2 people)			
Required screws	Fixing: N/A			
	Fixing of the counterweight to the support leg: Stainless steel hex-head self-drilling screw Ø4.8 x 50 mm			
	Intermediate rail + accessories: Stainless steel self-drilling screw Ø4.8 x 32 mm			
	Post: Stainless steel ALLEN screw M8 x 45			
	Toe board: 1 stainless steel self-drilling screw Ø4.8 x 32 mm			

Powder coating option for aluminiumparts available on request.

COMPONENT REFERENCES

	REF.	DESIGNATION	VISUAL	MATERIAL	WEIGHT	PACKAGING	QTY PER LOT	DIMENSIONS (mm)	LOT WEIGHT (kg)	VOLUME IN M3
RAILINGS	32914	RAILING Ø47 MM LG 3 M SWAGED END		6063	1,85	PALLET	196	3,000 x 1,200 x 400	362.60	1.44
	32352	RAILING Ø47 MM LG 3 M SWAGED END		6063	1,85	PALLET	196	3,000 x 1,200 x 400	362.60	1.44
	32913	MID-RAILING Ø35 EMBOUT RETREINT		6063	1,00	PALLET	196	3,000 x 1,200 x 400	196	1.44
	33321	MID-RAILING Ø35 SWAGED END		6063	1,00	PALLET	196	3,000 x 1,200 x 400	196	1.44

	REF.	DESIGNATION	VISUAL	MATERIAL	WEIGHT	PACKAGING	QTY PER LOT	DIMENSIONS (mm)	LOT WEIGHT (kg)	VOLUME IN M3
POSTS	33032	STRAIGHT POST 1205 MM		6063	0.77	PALLET	400	1,400 x 1,200 x 1,200	320	2.02
	33030	STRAIGHT POST 1205 MM(Ø567)		6063	0.76	PALLET	400	1,400 x 1,200 x 1,200	300	2.02
	33031	STRAIGHT POST 1105 MM		6063	0.70	PALLET	400	1,200 x 800 x 1,000	280	0.96
	32560	POST Ø47 STRAIGHT 1105 (Ø567)		6063	0.69	PALLET	400	1,200 x 800 x 1,000	276	0.96
	33033	POST Ø47 STRAIGHT 800 MM		6063	0.50	PALLET	400	1,200 x 800 x 800	200	0.77
	33034	POST Ø47 600 MM		6063	0.37	PALLET	400	1,200 x 800 x 1,000	148	0.96
	33035	STRAIGHT POST 400 MM		6063	0.25	PALLET	400	1,200 x 800 x 1,000	100	0.96

	REF.	DESIGNATION	VISUAL	MATERIAL	WEIGHT	PACKAGING	QTY PER LOT	DIMENSIONS (mm)	LOT WEIGHT (kg)	VOLUME IN M3
BASES	32918	BRACING LEG STRAIGHT		6063	1,30	PALLET	150	1,500 x 1,200 x 1,200	196.5	2.16
	32917	BRACING LEG INCLINED		6063	0.75	PALLET	150	1,500 x 1,200 x 1,200	300	2.16
	32929	FLAT BASE STRAIGHT		6063	0.48	CARTON	80	400 x 400 x 400	38.4	0.77
	32930	FLAT BASE INCLINEE		6063	0.50	CARTON	80	800x 600 x 200	40	0.77
	32912	FACE MOUNT STRAIGHT		6063	0.20	CARTON	100	400x400x400	20	0.77
	32911	FACE MOUNT OFFSET STRAIGHT 80 MM		6063	0.57	CARTON	80	400x400x400	45.28	0.77
	32910	FACE MOUNT OFFSET INCLINED 80 MM		6063	0.57	CARTON	80	400x400x400	45.28	0.77

COMPONENT REFERENCES

	REF.	DESIGNATION	VISUAL	MATERIAL	WEIGHT	PACKAGING	QTY PER LOT	DIMENSIONS (mm)	LOT WEIGHT (kg)	VOLUME IN M3
BASE	36715	FACE MOUNT STRAIGHT ON CONCRETE EXTERNAL CELLULAR		6063	4,69	PALLET	72	1,200 x 1,000 x 1,200	337,68	1.44
	36716	FACE MOUNT OUTWARD INCLINED ON AERATED CONCRETE		6063	5.66	PALLET	54	1,200 x 1,000 x 1,200	305.64	1.44
	36718	FACE MOUNT STRAIGHT ON OUTER CLADDING		6063	5.32	PALLET	72	1,200 x 1,000 x 1,200	383,04	1.44
	36719	FACE MOUNT INCLINED ON OUTER CLADDING		6063	6.28	PALLET	54	1,200 x 1,000 x 1,200	339,12	1.44
	33541	Z BASE ECO STRAIGHT		6063	1,55	PALLET	160	1,200 x 800 x 600	248	0.576
	32956	Z BASE ECO INCLINED		6063	1,55	PALLET	160	1,200 x 800 x 600	248	0.576
	33534	Z BASE0 STRAIGHT		6063	1,55	PALLET	160	1,200 x 800 x 600	248	0.576
	32957	Z BASE0 INCLINED		6063	1,55	PALLET	160	1,200 x 800 x 600	248	0.576
	33539	Z BASE100 STRAIGHT		6063	1,62	PALLET	160	1,200 x 800 x 600	259,20	0.576
	32958	Z BASE100 INCLINED		6063	1,62	PALLET	160	1,200 x 800 x 600	259,20	0.576
	33540	Z BASE160 STRAIGHT		6063	1,80	PALLET	160	1,200 x 800 x 600	288	0.576
	32959	Z BASE160 INCLINED		6063	1,80	PALLET	160	1,200 x 800 x 600	288	0.576
	32931	BASE STEEL DECK STRAIGHT		6063	2.05	PALLET	72	1,200 x 1,000 x 1,200	147,60	1.44
	32932	BASE STEEL DECK INCLINED		6063	2.13	PALLET	54	1,200 x 1,000 x 1,200	115.02	1.44
	37418	BASE D BASE 300 STRAIGHT		6063	1,61	PALLET	50	1,200 x 800 x 600	80.5	0.576
	37419	BASE D BASE 300 INCLINED		6063	1,62	PALLET	50	1,200 x 800 x 600	81	0.576
	37421	BASE D BASE 400 STRAIGHT		6063	1,89	PALLET	50	1,200 x 800 x 600	94,5	0.576
	37420	BASE D BASE 400 INCLINED		6063	1,91	PALLET	50	1,200 x 800 x 600	95.5	0.576
	37423	BASE D BASE 500 STRAIGHT		6063	2.18	PALLET	50	1,200 x 800 x 600	109	0.576
	37422	BASE D BASE 500 INCLINED		6063	2.20	PALLET	50	1,200 x 800 x 600	110	0.768

COMPONENT REFERENCES

	REF.	DESIGNATION	VISUAL	MATERIAL	WEIGHT	PACKAGING	QTY PER LOT	DIMENSIONS (mm)	LOT WEIGHT (kg)	VOLUME IN M3
BASES	37533	BE BASE 300 STRAIGHT BASE		6063	7,27	PALLET	50	1,200 x 800 x 800	363,5	0.768
	37534	BE BASE 300 INCLINED BASE		6063	7,29	PALLET	50	1,200 x 800 x 800	364,5	0.768
	37535	BE BASE 400 STRAIGHT BASE		6063	7,56	PALLET	50	1,200 x 800 x 800	378	0.768
	37536	BE BASE 400 INCLINED BASE		6063	7,57	PALLET	50	1,200 x 800 x 800	378.5	0.768
	37540	BE BASE 500 STRAIGHT BASE		6063	7,85	PALLET	50	1,200 x 800 x 800	392.5	0.768
	37541	BE BASE 500 INCLINED BASE		6063	7,86	PALLET	50	1,200 x 800 x 800	393	0.768

	REF.	DESIGNATION	VISUAL	MATERIAL	WEIGHT	PACKAGING	QTY PER LOT	DIMENSIONS (mm)	LOT WEIGHT (kg)	VOLUME IN M3
ACCESORIES	32571	PLOT 12.5 KG		Hormigón PP	12.5	PALLET	84	1,000 x 1,000 x 1,000	1,200	1
	32901	CAP POST 68 x 28	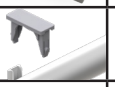	PA6MIF-VUV	0.2	CARTON	100	400 x 400 x 200	12	0.032
	33261	TOE BOARD H 180 MM LG 3,000 MM		6063	2.79	PALLET	100	3,000 x 1,200 x 400	279	1.44
	33008	TOE BOARD JOINT		6063	0.14	CARTON	50	200 x 200 x 200	7	0.008
	33013	TOE BOARD SUPPORT (SELF-SUPPORTING, FLAT)		6063	0.10	CARTON	50	200 x 200 x 200	5	0.008
	33012	TOE BOARD SUPPORT ON STEEL DECK		6063	0.11	CARTON	50	200 x 200 x 200	5.5	0.008
	33011	TOE BOARD SUPPORT KIT D BASE / BE		6063	0.52	CARTON	50	200 x 200 x 200	16	0.008
	33007	TOE BOARD ANGLE		Magnelis	0.14	CARTON	50	200 x 200 x 200	7	0.008
	32905	CAP RAILING Ø47 MM		PP UV	0.01	CARTON	100	200 x 200 x 200	3	0.008
	33083	CAP MID-RAILING Ø35 MM		PP UV	-	CARTON	100	200 x 200 x 200	3	0.008
	32915	ANGLE RAILING Ø47		PA6 MI UV	0.12	CARTON	100	400 x 400 x 200	12	0.032
	32916	ANGLE MID-RAILING Ø35		PA6 MI UV	-	CARTON	100	400 x 400 x 200	12	0.032

COMPONENT REFERENCES

	REF.	DESIGNATION	VISUAL	MATERIAL	WEIGHT	PACKAGING	QTY PER LOT	DIMENSIONS (mm)	LOT WEIGHT (kg)	VOLUME IN M3
ACCESORIES	33004	WALL TERMINATION RAILING Ø47 MM		PP UV	0.10	CARTON	50	200 x 200 x 200	5	0.008
	33005	WALL TERMINATION MID-RAILING Ø35 MM		PP UV	0.10	CARTON	50	200 x 200 x 200	5	0.008
	33213	COUNTERSUNK SCREW M8 X 10 INOX		Inox A2	-	CARTON	500	200 x 200 x 200	-	0.008
	33222	SELF-DRILLING SCREW 4,8x32 MM INOX		Inox A2	-	CARTON	500	200 x 200 x 200	-	0.008
	33223	SELF-DRILLING SCREW 4,8x50 MM INOX		Inox A2	-	CARTON	500	200 x 200 x 200	-	0.008
	33173	SELF-DRILLING SCREW 6 x 25 + WATERPROOF WASCHER		Inox A2	-	CARTON	500	200 x 200 x 200	-	0.008
	37054	Cup washer		EPDM	-	CARTON	500	200 x 200 x 200	-	0.008
	34023	KIT CONNECTION LADDER / GUARDRAIL		6063	3,28	PALLET	5	300 x 1,200 x 400	16.4	1.44
	34005	PROTECTION OF SKYLIGHT 1,200 MM		-	122.56	PALLET	1	300 x 1,200 x 400		1.44
	34006	PROTECTION OF SKYLIGHT 1,200 MM WITH GATE		-	168.88	PALLET	1	300 x 1,200 x 400		1.44
	34011	PROTECTION OF SKYLIGHT 1700 MM		-	156.38	PALLET	1	300 x 1,200 x 400		1.44
	34012	PROTECTION OF SKYLIGHT 1700 MM WITH GATE		-	212.29	PALLET	1	300 x 1,200 x 400		1.44
	34017	PROTECTION OF SKYLIGHT 2200 MM		-	261,38	PALLET	1	300 x 1,200 x 400		1.44
	34018	PROTECTION OF SKYLIGHT 2200 MM WITH GATE		-	241,18	PALLET	1	300 x 1,200 x 400		1.44
	34401	KIT WATERPROOFING FLAT BASE		6063	1	CARTON				
	35960	GATE ONLY H550 MM		S235	1,79	PALLET				
	35965	KIT TOE BOARD GATE H 1,100 MM		S235	0.29	PALLET				

emeonce

TURBIL GROUP

Calle Gutiérrez Solana, 8 - 1° Izq.
28036 Madrid, España

emeonce.es
info@emeonce.es